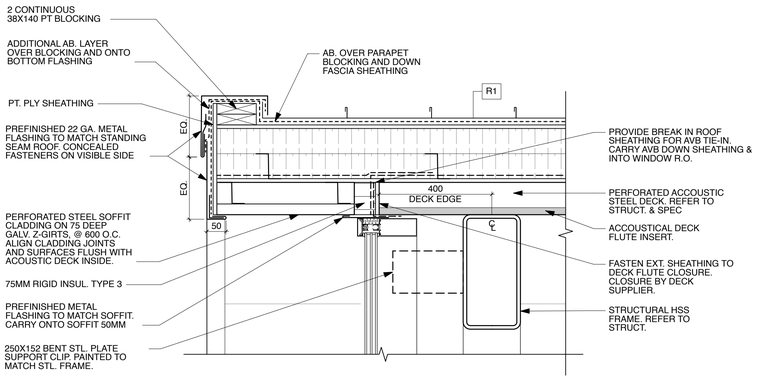

1 TYP. E/W WALL PARAPET DETAIL
1:10

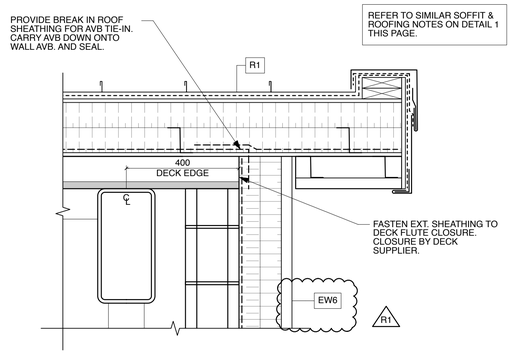

5 EAST SPLASHPAD WALL @ ROOF
1:10

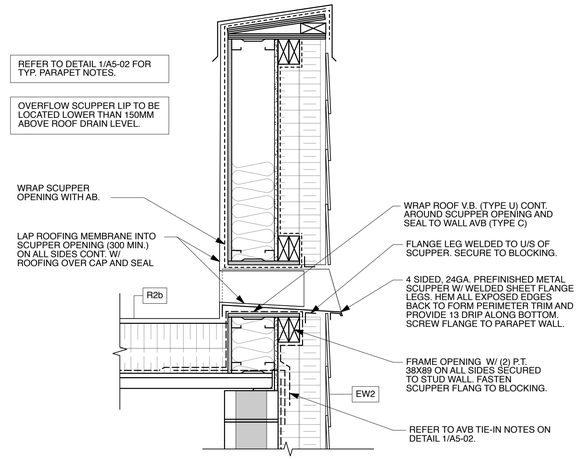

9 OVERFLOW SCUPPER @ EW2
1:10

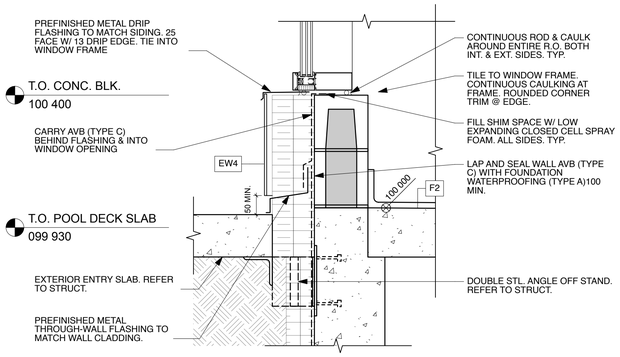

2 CURTAIN WALL SILL DTL. @ EAST SPLASH PAD WALL
1:10

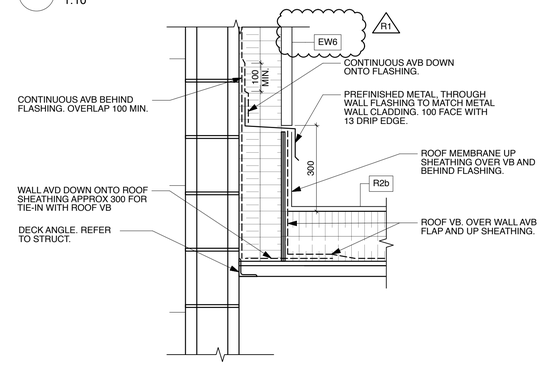

6 MPR ROOF @ EW5
1:10

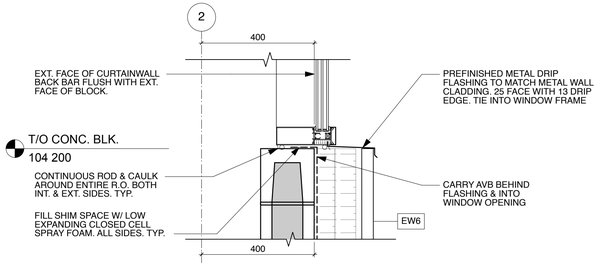

3 TYP. CURTAIN WALL SILL DTL. @ EW6
1:10

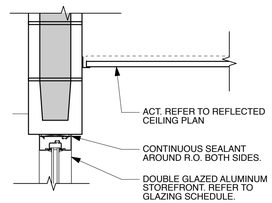

7 MPR WINDOW HEAD DETAIL
1:10

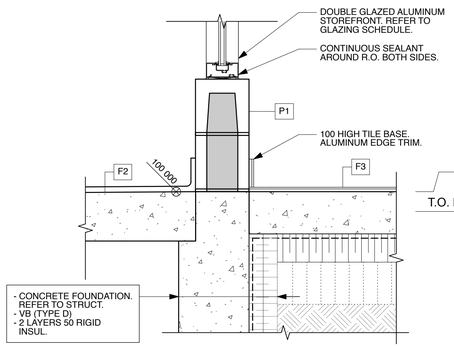

8 MPR WINDOW HEAD DETAIL
1:10

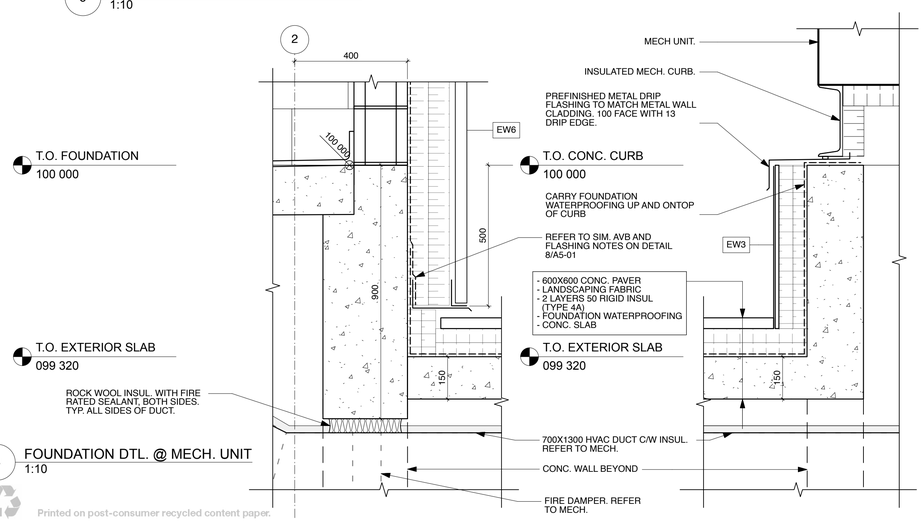

4 FOUNDATION DTL. @ MECH. UNIT
1:10

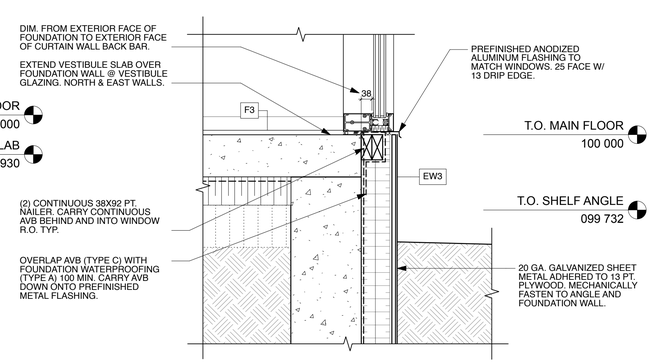

10 EAST VESTIBULE CURTAIN WALL SILL
1:10

Printed on post-consumer recycled content paper.

This drawing must not be scaled. The contractor shall verify all dimensions and other data on site prior to commencement of work. All discrepancies, errors, and omissions are to be reported to the architect. Drawing and specifications, as instruments of service, are the property of the architect, the copyright to the same being reserved to him. No reproduction may be made without the permission of the architect, and when made, must bear his name. All prints to be returned to the architect on request.

PRAIRIE ARCHITECTS INC.
Creating Sustainable Futures
300 - 141 Bannatyne Ave., Winnipeg, MB, R3B 0R3
telephone | 204.956.0938 **fax** | 204.943.5597
web | www.prairiearchitects.ca

issue / rev.

#	date	issue notes
1	2017.01.10	ADDENDUM 4
0	2016.12.08	ISSUED FOR CONSTRUCTION

professional seals

project information

SEVEN OAKS POOL RENOVATION & ADDITION

444 ADSUM DRIVE
WINNIPEG, MB
CANADA

client

CITY OF WINNIPEG
4TH FLOOR - 85 KING ST.
WINNIPEG, MB

drawing information

SECTION DETAILS

drawn by: **JDB**
approved by: **DF**

scale: **1:10**
date issued: **2017.01.10**
proj. #: **2014.66**
rev. #: **R-1**

SEVEN OAKS POOL RENOVATION & ADDITION
BID OPPORTUNITY NO. 1044-2016

A5 03