NOTES:

1. ALL CORNER AND T JOINTS TO BE 100% BUTT WELDS (TYPICAL UNLESS NOTED OTHERWISE)
2. ALL SPACERS TO BE 8 mm THICK S.S.
3. ALL MISCELLANEOUS METAL TO BE STAINLESS STEEL GRADE 316L UNLESS NOTED OTHERWISE.
4. ALL CONNECTIONS TO BE 16M A325 STAINLESS STEEL BOLTS WITH WASHERS E.F. UNLESS NOTED OTHERWISE.

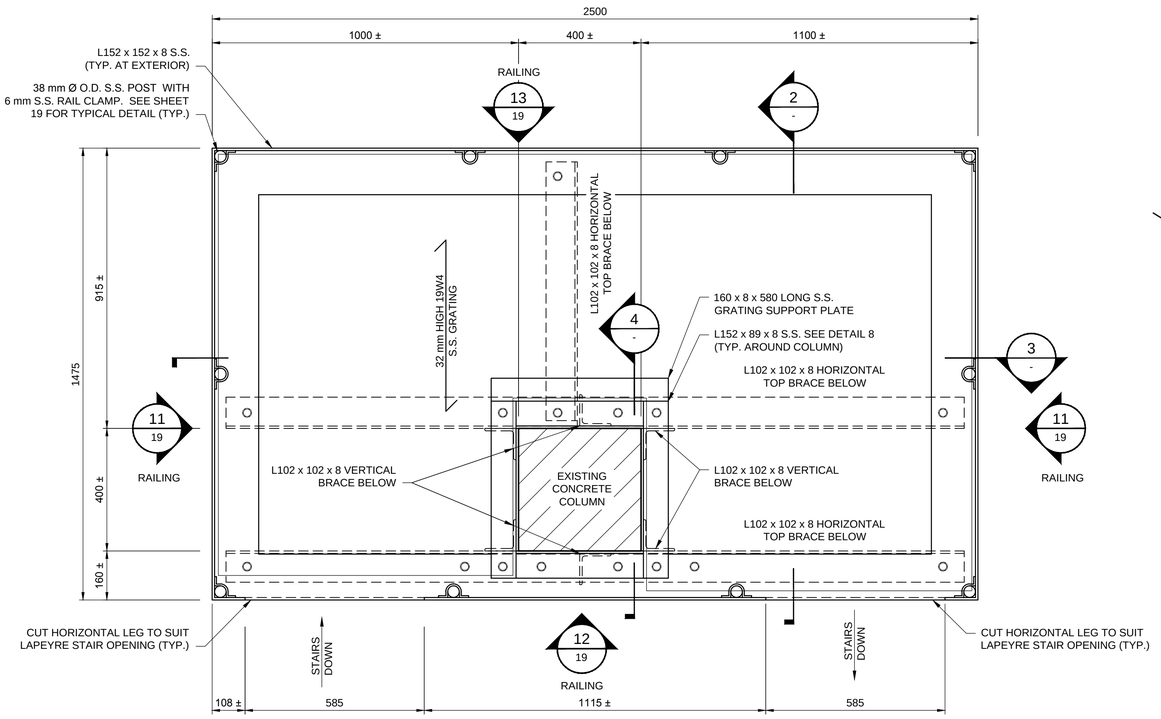

1 / - PLAN 1:10
TYPICAL PLATFORM B (ONE THUS)

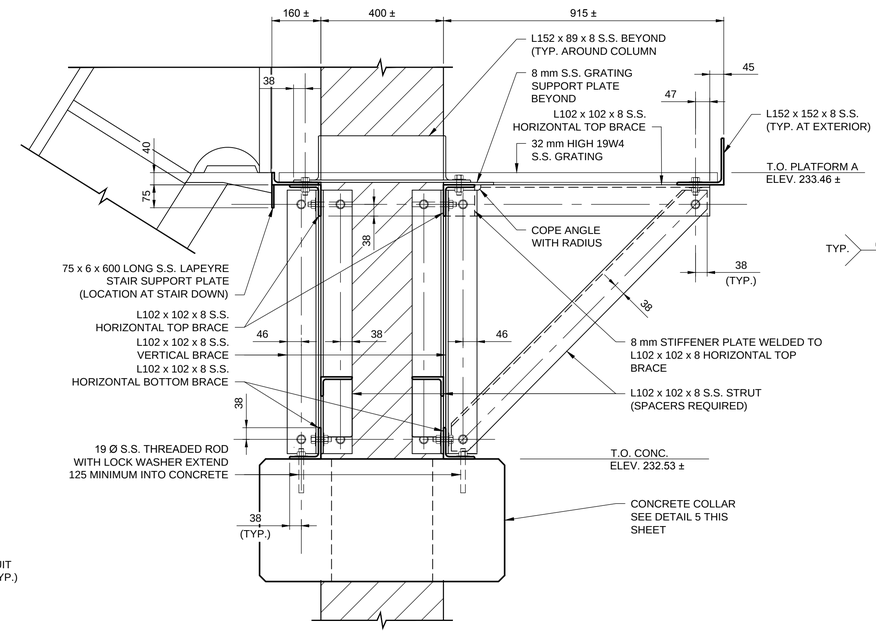

2 / - SECTION 1:10

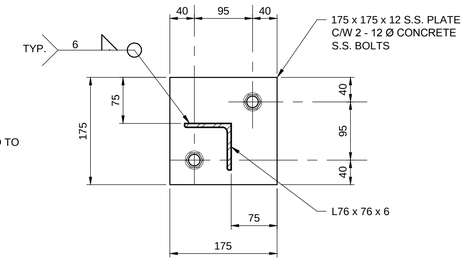

6 / - DETAIL 1:5
TYPICAL BASE PLATE

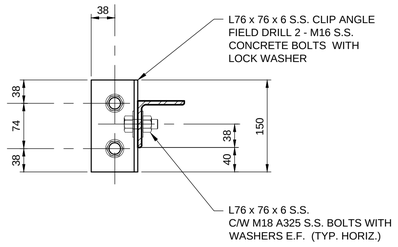

7 / - DETAIL 1:5
TYPICAL CLIP ANGLE CONNECTION

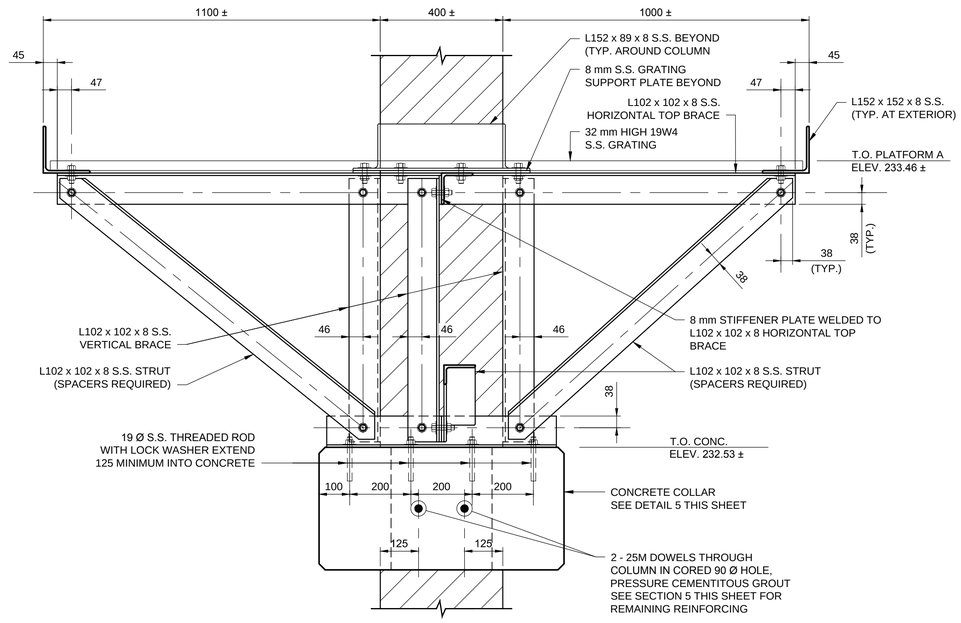

3 / - SECTION 1:10

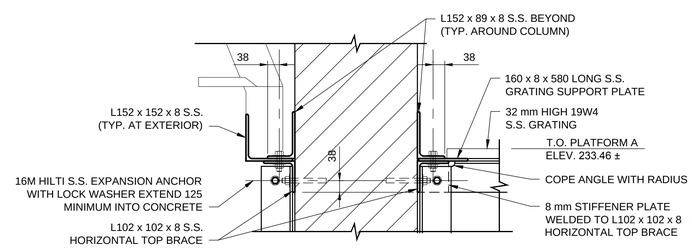

4 / - SECTION 1:10
AT COLUMN

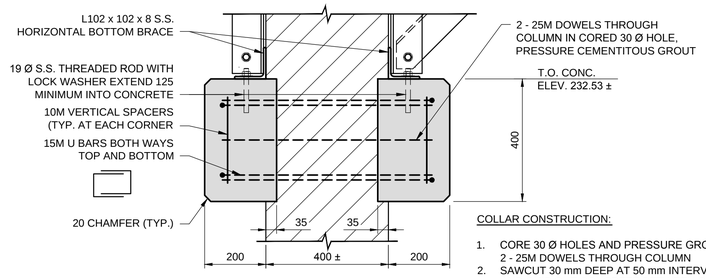

COLLAR CONSTRUCTION:

1. CORE 30 Ø HOLES AND PRESSURE GROUT, 2 - 25M DOWELS THROUGH COLUMN
2. SAWCUT 30 mm DEEP AT 50 mm INTERVALS AND CHIP OUT CONCRETE BETWEEN CUTS.
3. MECHANICALLY CLEAN SURFACE BY SANDBLASTING
4. INSTALL REINFORCING
5. POUR COLLAR WITH 35 MPa CONCRETE

5 / - DETAIL 1:10
TYPICAL COLLAR

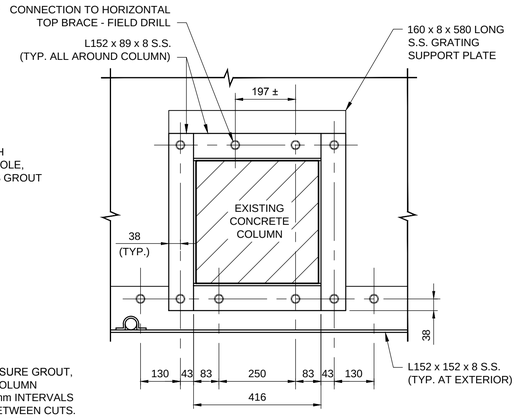

8 / - PLAN 1:10
TYPICAL BOLT LAYOUT AT COLUMN

METRIC

WHOLE NUMBERS INDICATE MILLIMETRES
DECIMALIZED NUMBERS INDICATE METRES

APEGM
Certificate of Authorization
Dillon Consulting Limited (MB)
No. 1789 Date: 2015-11-20

LOCATION APPROVED
UNDERGROUND STRUCTURES
N/A
SUPV. U/G STRUCTURES COMMITTEE — DATE

NOTE:
LOCATION OF UNDERGROUND STRUCTURES AS SHOWN ARE BASED ON THE BEST INFORMATION AVAILABLE BUT NO GUARANTEE IS GIVEN THAT ALL EXISTING UTILITIES ARE SHOWN OR THAT THE GIVEN LOCATIONS ARE EXACT. CONFIRMATION OF EXISTENCE AND EXACT LOCATION OF ALL SERVICES MUST BE OBTAINED FROM THE INDIVIDUAL UTILITIES BEFORE PROCEEDING WITH CONSTRUCTION.

B.M.
ELEV.
CONSTRUCTION COMPLETION DATE:

NO.	REVISIONS	DATE	BY
1	ISSUED FOR TENDER	2015 11 20	SSR

CHECKED BY	DRA
APPROVED BY	SSR
DESIGNED BY	FAK
DRAWN BY	TLK
SCALE: HORIZONTAL	AS NOTED
VERTICAL	
DATE	2015 11 20

PLOT DATE: 2015 11 19

DILLON CONSULTING
RELEASED FOR CONSTRUCTION
DATE

ENGINEER'S SEAL

CONSULTANT DRAWING NUMBER
14–1411–S–110

BID OPPORTUNITY: 930–2015
CONTRACT NUMBER:

Winnipeg
THE CITY OF WINNIPEG
WATER AND WASTE DEPARTMENT
ENGINEERING DIVISION

WILKES RESERVOIR NORTH CELL REHABILITATION
STAIR ACCESS PLATFORMS
PLATFORM A, SECTIONS AND DETAILS
SHEET 2 OF 3

SHEET 18 OF 47

CITY DRAWING NUMBER
1–0650R–S0009–002

FILE PATH: P:\20154593\00_Kemp_Wilkes\Working_Dwgs\300_Structural\
FILE NAME: 1–0650R–S0009–002.dwg