APPENDIX ‘A’

STANDARDS

GROUNDING

1. USE OF COPPERWELD GROUND RODS

   COPPERWELD GROUND RODS SHALL BE USED IN ALL AREAS OF THE PROVINCE ON THE DISTRIBUTION GROUNDING SYSTEM.

   CADWELD CONNECTION TO GROUND RODS
   ALL CONNECTIONS TO GROUND RODS SHALL BE MADE USING CADWELD CONNECTIONS. ALL CONNECTIONS SHALL BE INSPECTED TO ASSURE A PROPER CONNECTION HAS BEEN MADE.

2. SEASONAL VARIATIONS OF GROUND RESISTANCE

   THE DEPTH OF ALL GROUND RODS SHALL BE SUFFICIENT TO ENSURE ADEQUATE GROUNDING RESISTANCE DURING ALL SEASONS OF THE YEAR.
   GROUND RESISTANCE CAN INCREASE DUE TO VARIATIONS IN THE LEVEL OF THE WATER TABLE AND DUE TO THE DEPTH OF THE FROST IN THE EARTH. A ROD LENGTH OF 3 METERS IS MINIMUM.

3. EQUIPMENT, CASES AND CUBICLES

   ALL CASES OF DISTRIBUTION APPARATUS INSTALLATIONS, SUCH AS TRANSFORMERS, VOLTAGE REGULATORS, CIRCUIT RECLOSERS, CAPACITORS, CONCENTRIC NEUTRAL/ CORRUGATED TAPE SHIELD DIPS AND RISERS, DISTRIBUTION CENTER CUBICLES, JUNCTION POINT CUBICLES, ETC., CONNECTED TO PRIMARY LINES SHALL BE GROUNDED.

4. OVERHEAD NEUTRAL, CONCENTRIC NEUTRAL/CONCENTRIC TAPE SHIELD OF CABLE AND GROUND INTERCONNECTION

   THE PRINCIPLE OF RUNNING THE GROUNDING CONDUCTORS IN OPEN VIEW SHALL BE OBSERVED WHENEVER POSSIBLE. THIS APPLIES TO GROUND INTERCONNECTIONS BETWEEN SURGE ARRESTERS, OCRs, CONCENTRIC NEUTRAL/CONCENTRIC TAPE SHIELD OF CABLE, TRANSFORMER BANKS, ETC. IT IS DESIRABLE THAT THESE GROUNDING CONDUCTOR INTERCONNECTIONS BE PLAINLY SEEN BY PERSONS WORKING ON THE POLE IN ORDER THAT APPROPRIATE SAFETY MEASURES RELATING TO SECOND POINTS OF CONTACT MAY BE TAKEN. IT ALSO APPLIES WHERE GROUNDING CONDUCTORS ARE RUN TO THE NEUTRAL ON A Z OR XY TYPE LINE AND DIP AND RISER POLES OF THE RUD SYSTEM TAP OFF. REASONABLE SLACKNESS SHOULD BE MAINTAINED IN THESE CONDUCTORS TO PREVENT VIBRATION FAILURE.

5. GROUNDING IN ROCK AREAS

   WHERE GROUND CONDITIONS ARE SUCH THAT GROUND RODS CANNOT BE DRIVEN AT TRANSFORMER INSTALLATIONS OR OTHER POINTS WHERE THEY ARE NORMALLY REQUIRED, GROUNDING POINTS SHALL BE ESTABLISHED IN THE NEAR VICINITY.

APPROVED	REVISIONS			MANITOBA HYDRO DISTRIBUTION STANDARDS
ORIGINAL DRAWING SEALED BY E.H. WIEBE 94-07-11				**GROUNDING**
	00-07	2	NOTE 1 REVISED TO INCLUDE CADWELD	
	98-11	1	ADDED COPPERWELD GROUNDS RODS	

DRAWN	CHECKED	DATE		SHT	REV
R.L.B./CAD		93-11	**CD 50-5**	0001 OF 3	02

1-04430-DA-56800-0001

6. OVERHEAD MULTIPLE GROUNDED NEUTRAL DISTRIBUTION SYSTEM

AT THE TIME OF CONSTRUCTION USE GN1 ASSEMBLY. THE PREFERRED METHOD OF REDUCING THE GROUND RESISTANCE, IS TO USE DEEP GROUNDING WITH SECTIONAL RODS IN SERIES.

IF AFTER INSTALLATION AND TESTING THE GN1 ASSEMBLY USING DEEP GROUNDING, IT IS OBVIOUS THAT THE REQUIRED 25 OHM RESISTANCE CANNOT BE OBTAINED, USE GN2 OR GN3 ASSEMBLY USING DEEP GROUNDING TO REDUCE RESISTANCE.

IF THE RESISTANCE OF THE SYSTEM GROUND, INCLUDING THE CUSTOMER GROUND WHERE APPLICABLE, EXCEEDS 5 OHMs IN THE SUMMER, WITH ONE GROUND DISCONNECTED, REDUCE THE SYSTEM GROUND RESISTANCE.

7. OVERHEAD EARTH RETURN DISTRIBUTION SYSTEM (Q-LINE)

AT THE TIME OF CONSTRUCTION, USE GN1 AT THE TAP-OFF POLE AND GN1 AT THE TRANSFORMER POLE. IF THE TRANSFORMER IS LOCATED ON A LINE POLE USE GQ1. THE GROUNDING INSTALLATIONS SHALL BE THOROUGHLY INSPECTED TO ENSURE QUALITY OF WORKMANSHIP. THE PREFERRED METHOD OF REDUCING THE GROUND RESISTANCE IS TO USE DEEP GROUNDING WITH SECTIONAL RODS IN SERIES.

IF AFTER INSTALLATION AND TESTING OF THE ABOVE GROUND ROD INSTALLATIONS USING DEEP GROUNDING, IT IS OBVIOUS THAT THE REQUIRED 5 OHM RESISTANCE OF THE ASSEMBLIES CANNOT BE OBTAINED, INSTALL A THIRD GN1 ASSEMBLY ONE SPAN AWAY. (REFER TO CD50-15 AND CD50-20 FOR FURTHER DETAILS).

IF THE RESISTANCE OF THE SYSTEM GROUND, INCLUDING THE CUSTOMER GROUND WHERE APPLICABLE, EXCEEDS 5 OHMs IN THE SUMMER WITH ONE GROUND ROD DISCONNECTED, REDUCE THE SYSTEM GROUND RESISTANCE.

8. UNDERGROUND DISTRIBUTION SYSTEM AT TIME OF CONSTRUCTION

AT TIME OF CONSTRUCTION USE GU1 ASSEMBLY AT ALL UNDERGROUND CABLE POLES.

USE Q-LINE GROUNDING STANDARDS AT ALL OVERHEAD TRANSFORMER POLES SUPPLIED FROM THE RUD SYSTEM.

USE GROUND ROD LAYOUT SHOWN IN SECTION 220 OF THIS STANDARD FOR PADMOUNTED EQUIPMENT. THE RESISTANCE OF THE INSTALLATION SHALL BE 5 OHMS OR LESS. THE PREFERRED METHOD OF REDUCING THE GROUND RESISTANCE IS TO USE DEEP GROUNDING WITH SECTIONAL RODS IN SERIES.

THE GROUNDING INSTALLATIONS SHALL BE THOROUGHLY INSPECTED TO ENSURE QUALITY OF WORKMANSHIP.

IF THE RESISTANCE OF THE SYSTEM GROUND, INCLUDING THE CUSTOMER GROUND WHERE APPLICABLE, EXCEEDS 5 OHMs IN THE SUMMER WITH ONE GROUND ROD DISCONNECTED, REDUCE THE SYSTEM GROUND RESISTANCE.

IF AFTER INSTALLATION AND TESTING OF THE ABOVE GROUND ROD INSTALLATIONS USING DEEP GROUNDING, IT IS OBVIOUS THAT THE REQUIRED 5 OHM RESISTANCE OF THE ASSEMBLIES CANNOT BE OBTAINED, INSTALL MULTI RODS IN PARALLEL USING USING GU2 OR GU3 ASSEMBLIES.

HOWEVER, IF THE SUMMER COMBINED GROUND RESISTANCE OF THE RODS ONLY EXCEED 5 OHMs, GROUNDING SHALL BE IMPROVED TO MEET THE REQUIRED STANDARDS. (REFER TO CD50-15 AND CD50-20 FOR FURTHER DETAILS).

9. REGULATOR NEUTRAL ON Q-LINES

ON 2 AND 3 PHASE LINES, INSTALL A NEUTRAL BETWEEN ALL REGULATORS AND GN1 ASSEMBLY AT EACH REGULATOR. ON SINGLE PHASE LINES, Q-LINES ONLY, INSTALL 1 SPAN OF NEUTRAL ON EACH SIDE OF REGULATOR AND USE GN1 AT EACH GROUNDING POLE AS PER DRAWING CD100-10.

10. INTERCHANGE TRANSFORMERS

AT TIME OF CONSTRUCTION, USE GN1 AT EACH END POLE. THE RESISTANCE OF THE GROUNDING ASSEMBLY AT EACH POLE MUST NOT EXCEED 5 OHMs.

THE PREFERRED METHOD OF REDUCING THE GROUND RESISTANCE IS TO USE DEEP GROUNDING WITH SECTIONAL RODS IN SERIES.

IF AFTER INSTALLATION AND TESTING OF THE GN1 ASSEMBLIES USING DEEP GROUNDING AT EACH POLE, WITH THE OTHER DISCONNECTED, IT IS OBVIOUS THAT THE REQUIRED 5 OHM RESISTANCE OF THE ASSEMBLY CANNOT BE OBTAINED, USE A GN2 OR GN3 ASSEMBLY USING DEEP GROUNDING TO REDUCE RESISTANCE.

11. GROUND TESTING OF NEW AND UPGRADED INSTALLATIONS

ALL GROUND RODS SHALL BE TESTED AND MADE TO COMPLY WITH THIS STANDARD UPON INSTALLATION. TEST RESULTS SHALL BE RECORDED ON TLMS, (TRANSFORMER LOAD MANAGEMENT SYSTEM).

APPROVED	REVISIONS			MANITOBA HYDRO DISTRIBUTION STANDARDS
ORIGINAL DRAWING SEALED BY E.H. WIEBE 94-07-11	00-07	2	NOTES REVISED SHEET 4 DELETED	**GROUNDING**
	98-11	1	NOTES REVISED	

DRAWN	CHECKED	DATE		SHT	REV
R.L.B./CAD		93-11	**CD 50-5**	0003 OF 3	02

1-04430-DA-56800-0001

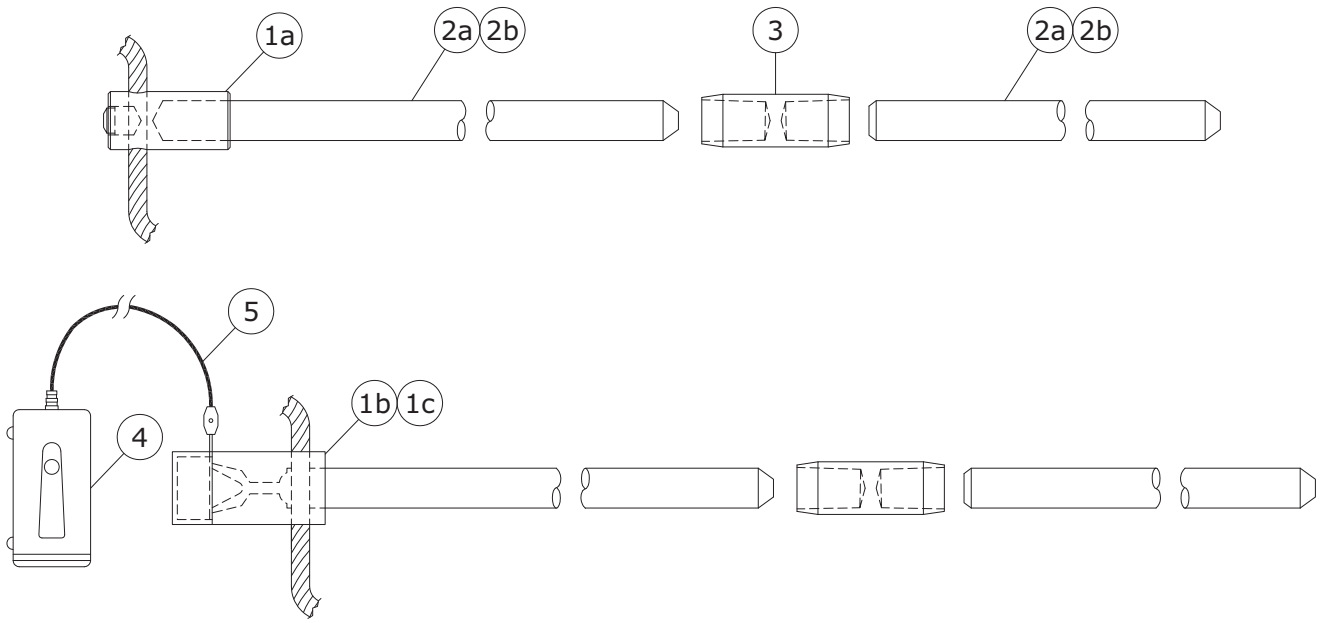

COPPERWELD - SECTIONAL

ITEM No.	DESCRIPTION	MH CIIC
1a	HAMMERLOCK FOR #2 & #4 CU	04 60 24
1b 1c	ONE SHOT PLUS FOR 2/0 ONE SHOT PLUS FOR 4/0	03 59 15 03 77 06
2a 2b	10' CU-WELD ROD SECTIONAL (SEE NOTE 2) 6' CU-WELD ROD SECTIONAL	71 70 10 00 68 26
3	COUPLING CU-WELD	00 52 27
4	ELECTRONIC IGNITER FOR ONE SHOT PLUS WITH 15' CORD	03 59 10
5	15' REPLACEMENT CORD	03 67 43

NOTES:

1. FOR 3/4" GROUND RODS. IF A 5/8" GROUND ROD IS ENCOUNTERED, IT IS TO BE REPLACED WITH A 3/4" ROD.

2. FIRST GROUND ROD SHALL BE A 10' ROD.

APPROVED	REVISIONS			MANITOBA HYDRO DISTRIBUTION STANDARDS
ORIGINAL DRAWING SEALED BY E.H. WIEBE 99-01-04	13-01	3	ADDED HAMMERLOCK CONNECTOR	**GROUND ROD MATERIAL DETAIL**
	08-07	2	ADDED ELECTRONIC IGNITER & REVISED TABLE	
	00-08	1	REMOVED STEEL AND GALVANIZED RODS, ONE SHOT ADDED	

DRAWN	CHECKED	DATE		SHT	REV
R.L.B./CAD	D.F./D.O.	98-08	**CD 50-7**	0001 OF 1	03

1-04430-DA-56800-0003

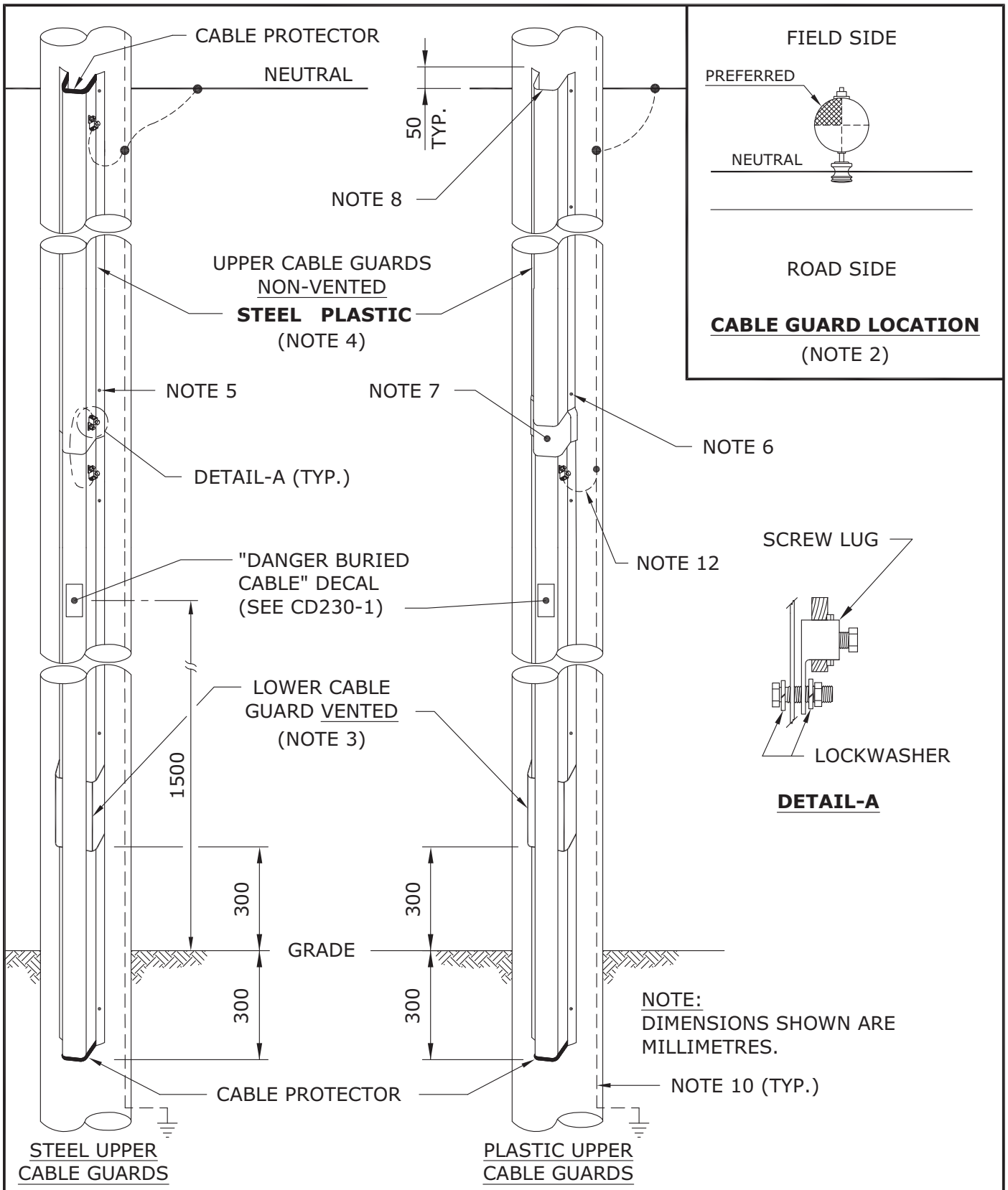

APPROVED	REVISIONS			MANITOBA HYDRO DISTRIBUTION STANDARDS
ORIGINAL DRAWING SEALED BY E.H. WIEBE 94-07-03	99-10	2	PLASTIC CABLE GUARD AND SHEET 2 ADDED	**CABLE GUARD DETAILS ON DIP/RISER POLES**
	95-07	1	CABLE GUARD LOCATION SHOWN,	

DRAWN	CHECKED	DATE		SHT	REV
R.L.B./CAD	G.W.	93-06	**CD 200-63**	0001 OF 2	02

1-04431-DA-52090-0034

NOTES:

1. FOR CABLE GUARD SELECTION GUIDE, REFER TO DRAWING CD200-66.

2. TO PROVIDE A SAFER CLIMBING SURFACE AND TO PREVENT VEHICULAR DAMAGE TO THE CABLE GUARD, THE PREFERRED ATTACHMENT OF THE CABLE GUARD TO THE POLE SHOULD BE IN THE QUADRANT AS SHOWN.

3. THE LOWER CABLE GUARD SHALL BE GALVANIZED STEEL AND VENTED.

4. UPPER CABLE GUARD SHALL BE PLASTIC FOR THE 50mm & 90mm GUARDS AND GALVANIZED STEEL FOR THE 130mm GUARD.

5. ATTACH GALVANIZED STEEL CABLE GUARD TO POLE WITH 3/8" LAG SCREWS (S.C. # 72 60 03).

6. ATTACH THE PLASTIC CABLE GUARD TO THE POLE WITH #16 x 2" WOOD SCREWS (S.C. # 72 95 10).

7. POSITION THE LAP-JOINT OF THE PLASTIC CABLE GUARD DOWN & OVER LAPPED A MINIMUM OF 25mm ONTO THE VENTED CABLE GUARD.

8. ENSURE THAT THE INNER EDGE IS BEVELLED.

9. CABLE GUARD TO EXTEND 50mm ABOVE THE NEUTRAL CONDUCTOR.

10. GROUNDING AND BONDING CONDUCTORS SHALL BE #4 BARE COPPER.

11. FOR GROUNDING CONNECTIONS, REFER TO DRAWING CD200-60.

12. BOND VENTED CABLE GUARD AT THIS POINT.

APPROVED	REVISIONS	MANITOBA HYDRO DISTRIBUTION STANDARDS
ORIGINAL DRAWING SEALED BY E.H. WIEBE 99-11-03		**CABLE GUARD DETAILS ON DIP/RISER POLES**

DRAWN	CHECKED	DATE		SHT	REV
R.L.B./CAD	G.W./K.C.H.	99-10	**CD 200-63**	0002 OF 2	00

1-04431-DA-52090-0034

SECONDARY CABLE	TYPICAL USAGE
#4 AL. CONCENTRIC NEUTRAL	STREET LIGHT CIRCUITS
1/0 AL. TRIPLEX	SECONDARY RESIDENTIAL SERVICES AND HEAVILY LOADED STREET LIGHT CIRCUITS WHERE VOLTAGE DROP MAY BE A PROBLEM
4/0 AL. TRIPLEX	SECONDARY RESIDENTIAL SERVICES
350 TRIPLEX	SECONDARY RESIDENTIAL SERVICES
350 AL. QUADRAPLEX	THREE PHASE SECONDARY SERVICES 400 AMP OR 200A OVER 75m
750 AL. OR 1000 CU.	THREE PHASE SECONDARY SERVICES OVER 400 AMPS

NOTE:

SEE CD225-4 FOR SIZING AND SPACING OF SINGLE AND THREE PHASE CONDUCTORS.

APPROVED	REVISIONS			MANITOBA HYDRO DISTRIBUTION STANDARDS
ORIGINAL DRAWING SEALED BY E.H. WIEBE 88-03-29	06-03	10	ADDED NOTE AND 350 TRIPLEX	**UNDERGROUND SECONDARY CABLE**
	99-04	9	4/0 AL. TRIPLEX, NOTE CHANGED	
	97-11	8	#4 AL. TRIPLEX NOW #4 AL. CONCENTRIC NEUTRAL	

DRAWN	CHECKED	DATE		SHT	REV
W.B./CAD	B.H./K.H.	87-08	**CD 210-12**	0001 OF 2	10

1-04431-DA-58041-0008

BASIC CONSTRUCTION OF UNDERGROUND SECONDARY CABLES

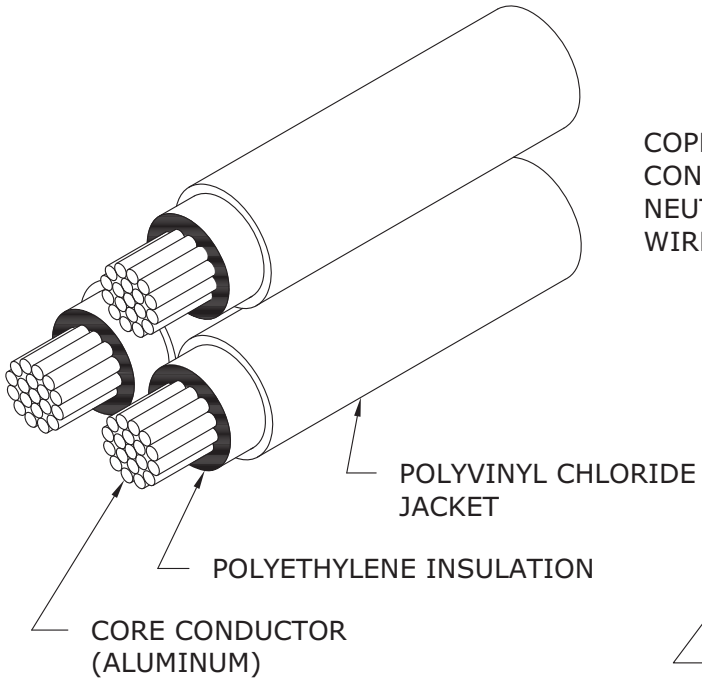

1/0 & 4/0 AND 350 TRIPLEX

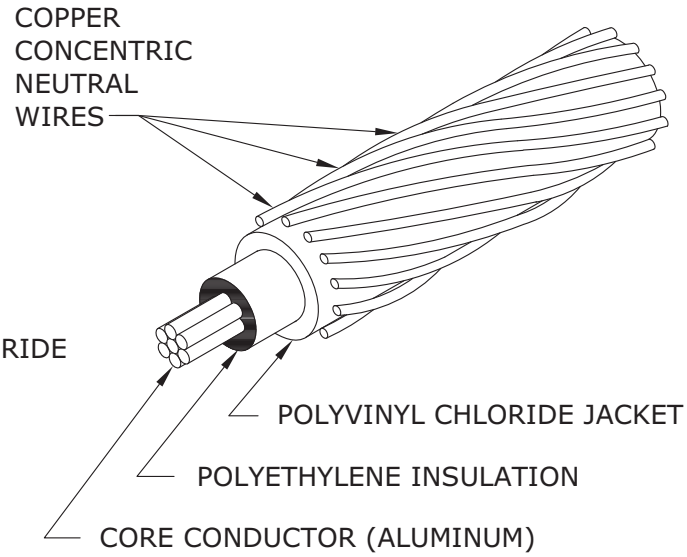

 # 4 CONCENTRIC NEUTRAL CABLE

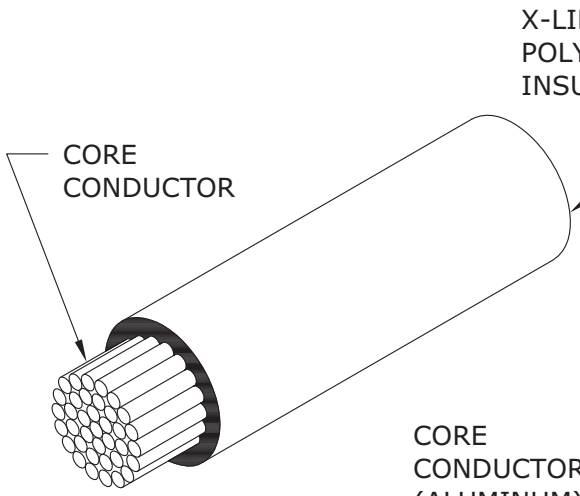

750 kcmil (AL) & 1000 kcmil (CU) RWU

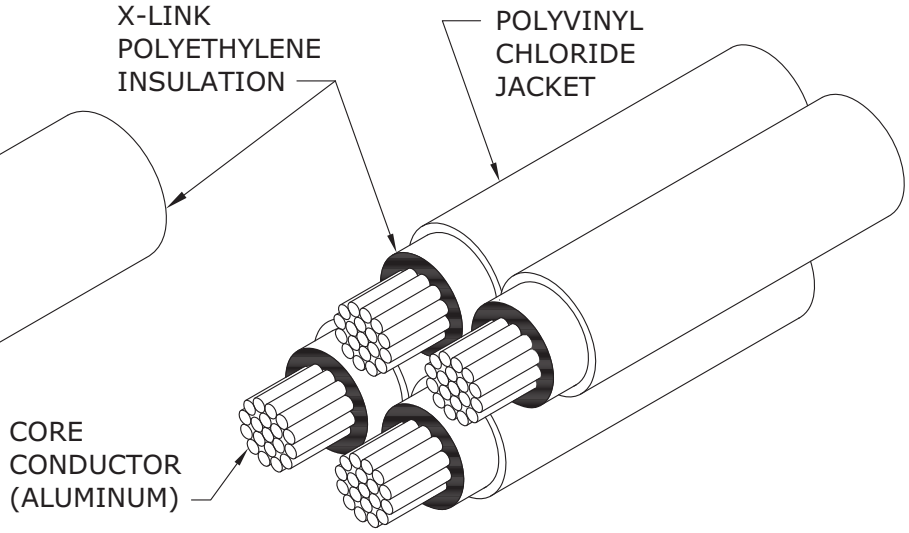

350 kcmil QUADRAPLEX

APPROVED	REVISIONS			MANITOBA HYDRO DISTRIBUTION STANDARDS
ORIGINAL DRAWING SEALED BY E.H. WIEBE 94-07-03	06-03	2	REPLACED 4/0 TRIPLEX WITH 4/0 & 350 TRIPLEX	**UNDERGROUND SECONDARY CABLE**
	95-01	1	C/N WIRES NO LONGER TINNED	
	93-07	0	500 MCM DELETED 350 750 kcmil ADDED FORMERLY CD210-3	

DRAWN	CHECKED	DATE		SHT	REV
W.B./CAD	B.H.	93-07	**CD 210-12**	0002 OF 2	02

1-04431-DA-58041-0008

UNDERGROUND SECONDARY CABLE

VOLTAGE RATING	600V	600V	600V	600V	1000V	1000V
CORE CONDUCTOR SIZE	#4	1/0	4/0	350 kcmil	750 kcmil	1000 kcmil
CORE CONDUCTOR MATERIAL	ALUM.	ALUM.	ALUM.	ALUM.	ALUM.	COPPER
TYPE OF CABLE	C/N	TRIPLEX	TRIPLEX	TRIPLEX OR QUADPLEX	1-COND.	1-COND.
NEUTRAL SIZE AND TYPE	#6 CU. Concentric Neutral	1/0 ALUM.	4/0 ALUM.	350 kcmil ALUM.	NONE	NONE
MIN. BENDING RADIUS (mm)	125	115	150	180	250	300
DC RESISTANCE @ 20°C (OHMS/km)	1.360	0.538	0.269	0.163	0.078	0.037
** DIRECT BURIED AMPACITY (@ 20°C ambient)	125	215	300	420	* 725	* 1080
VENTED CABLE GUARD AMPACITY (@ 20°C ambient)	100	175	250	330	575	855
*** BURIED DUCT AMPACITY (@ 20°C ambient)	70	130	195	265	425	630
CONDUCTOR DIAMETER (mm)	5.4	8.9	12.7	15.8	25	28.8
NOMIMAL DIA. OVER INSUL. (mm)	8.6	12.5	16.5	21.6	31.4	35.3
NOMINAL DIA. OVER JACKET (mm)	12.74	14.7	17.8	22.8	N/A	N/A
LINEAL MASS (kg/km)	N/A	760	1320	2200/2900	1330	4983
COLD SHRINK END CAPS (MH CIIC)	N/A	15 31 40	15 31 40	15 31 60	15 31 75	15 31 75
HEAT SHRINK END CAPS (MH CIIC)	03 67 31	03 67 31	03 67 31	03 67 30	01 79 82	03 48 63

* PROVIDED MULTIPLE CONDUCTORS PER PHASE ARE SPACED AS SHOWN IN DRAWING CD225-4.

** CABLES DIRECTLY BURIED OUT OF PADMOUNT TRANSFORMERS OR PEDESTALS.

*** CABLES IN NON-VENTED CABLE GUARDS OR IN CONDUITS LONGER THAN 2 METRES.

APPROVED	REVISIONS			MANITOBA HYDRO DISTRIBUTION STANDARDS
ORIGINAL DRAWING SEALED BY E.H. WIEBE 94-07-03	08-12	3	ADDED COLD & HEAT SHRINK CAPS AND LINEAL MASS TO TABLE	**STANDARD UNDERGROUND SECONDARY CABLE DATA**
	06-03	2	REMOVED 1000V 500 kcmil COPPER 1-COND & ROTATED	
	95-01	1	1000V 4/0 ALUM. DELETED	

DRAWN	CHECKED	DATE		SHT	REV
W.B./CAD	B.H./K.C.H.	93-07	**CD 210-15**	0001 OF 1	03

1-04431-DA-58041-0009

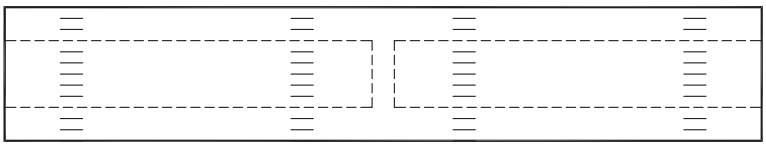

- FOR SPLICING SECONDARY ALUMINUM/COPPER CONDUCTORS.
- NOT SUITABLE FOR USE ON PRIMARY CONDUCTORS.
- COMPLETE WITH BARRIER TO PREVENT MOISTURE MIGRATION.
- FILLED WITH SYNTHETIC INHIBITOR.
- STAMPED WITH CONDUCTOR AND DIE SIZE.
- **COMPRESSION TOOL DIE MUST MATCH DIE NUMBER STAMPED ON CONNECTOR.**
- WIRE BRUSH ALL CONDUCTORS PRIOR TO INSTALLING CONNECTOR.

*** UNDERGROUND SECONDARY CABLE COMPRESSION CONNECTORS**

CONDUCTOR SIZE		STORES CODE	TOOL (DIES)	
FROM	TO		PREFERRED	ALTERNATE
#4	#4	74 27 64	Y35 (UCSA 22)	** MD6 (WCSA 22, BG)
1/0	#2	74 27 30		
1/0	1/0	74 27 65		
4/0	1/0	74 27 67	Y35 (UCSA 24)	** MD6 (WCSA 24, 249)
4/0	4/0	74 27 68		
350	4/0	74 27 78	Y35 (UCSA 28)	---
350	350	74 27 72		
750	500	74 27 27	Y46/ADPT (UCSA 30)	---

* FOR CONNECTING INSULATED ALUMINUM TO BARE COPPER, REFER TO DRAWING CD215-13.

** ROTATE MD6 TOOL 180° AFTER EVERY CRIMP.

APPROVED	REVISIONS			MANITOBA HYDRO DISTRIBUTION STANDARDS
ORIGINAL DRAWING SEALED BY E.H. WIEBE 94-07-03	95-09	2	350-4/0 CONNECTOR ADDED	**UNDERGROUND SECONDARY CABLE COMPRESSION CONNECTORS**
	95-01	1	NOTE ON MD6 TOOL ADDED	

DRAWN	CHECKED	DATE		SHT	REV
W.B./CAD	G.W.	93-07	**CD 210-21**	0001 OF 1	02

1-04431-DA-58043-0006

- COMPRESSION TOOL DIE MUST MATCH DIE NUMBER STAMPED ON CONNECTOR.
- WIRE BRUSH CONDUCTORS PRIOR TO INSTALLING COMPRESSION CONNECTORS.

UNDERGROUND NEUTRAL COMPRESSION CONNECTORS			
CONDUCTOR SIZE		STORES CODE	TOOL (DIES)
FROM	TO		
#4	#4	74 32 04	MD6 (162)
#2	#2	74 32 02	MD6 (163)
2/0	2/0	74 31 26	MD6 (166)
4/0	4/0	74 31 28	Y35 (168)
350	350	74 32 31	Y35 (267)

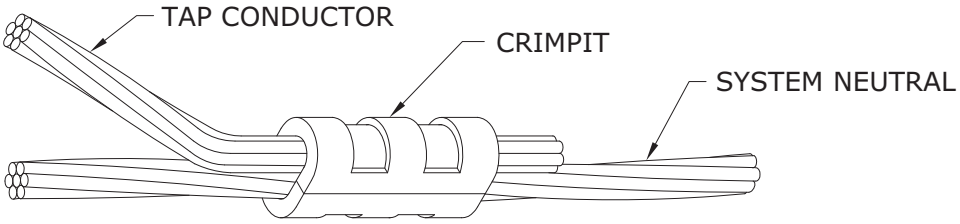

UNDERGROUND NEUTRAL "C" TYPE (CRIMPIT) COMPRESSION CONNECTORS * (FOR USE ON COPPER CONDUCTORS ONLY)			
CONDUCTOR SIZE		STORES CODE	TOOL (DIES)
RUN	TAP		
#6 - #4	#6	74 41 10	MD6 (BG)
#4	#4	74 40 90	MD6 (BG)
#2	#4	74 40 80	MD6 (WC)
#2	#2	74 40 70	MD6 (WC)
1/0 - 2/0	1/0 - 2/0	74 41 12	Y35 (UO)
3/0 - 250	#6 - 2/0	74 41 15	Y35 (U997)
3/0 - 250	3/0 - 250	74 41 16	Y35 (U997)
300 - 500	#6 - 2/0	54 23 60	Y46 (P1011)
300 - 500	3/0 - 250	18 30 74	Y46 (P1011)

* FOR CONNECTING BARE COPPER TO INSULATED ALUMINUM, REFER TO DRAWING CD215-13.

APPROVED	REVISIONS			MANITOBA HYDRO DISTRIBUTION STANDARDS
ORIGINAL DRAWING SEALED BY E.H. WIEBE 94-07-03	10-12	2	ADDED CONNECTOR	**UNDERGROUND NEUTRAL COMPRESSION CONNECTORS**
	95-01	1	NOTES REARRANGED	
	93-07	0	CONNECTORS ADDED, FORMERLY CD210-8	

DRAWN	CHECKED	DATE		SHT	REV
W.B./CAD	K.C.H.	93-07	**CD 210-24**	0001 OF 1	02

1-04431-DA-58043-0007

THERE ARE FOUR METHODS FOR SPLICING 600 VOLT UNDERGROUND SECONDARY CABLES:

1) HEAT SHRINK INSULATING TUBING SPLICE
2) PRE-STRETCHED INSULATING TUBING SPLICE
3) RAYCHEM RAYVOLVE
4) TAPED SPLICE

750 kcmil AND 1000 kcmil CABLES, USED IN CONJUNCTION WITH 3-PHASE COMMERCIAL SERVICES, SHALL NOT BE SPLICED, EXCEPT FOR EMERGENCY REPAIRS.

GENERAL INSTRUCTIONS:

1. a) FOR 1/0 AND 4/0 TRIPLEX CABLES:
   - REMOVE ANY DAMAGED OR CONTAMINATED PORTIONS OF CABLE.
   - TRAIN CABLES INTO FINAL POSITION (DO NOT SNAKE IN TRENCH).
   - CUT CABLES SQUARE AND BUTT ENDS.
   - STAGGER SPLICES.
   - PROCEED TO STEP 2.

   b) FOR #4 CONCENTRIC NEUTRAL CABLE:
   - REMOVE ANY DAMAGED OR CONTAMINATED PORTIONS OF CABLE.
   - TRAIN CABLES INTO FINAL POSITION WITH ENDS OVERLAPPING C/L BY 150mm.
   - TIGHTLY TWIST CONCENTRIC NEUTRAL WIRES INTO A BUNDLED CONDUCTOR FOR APPROXIMATELY 250mm AND TEMPORARILY FOLD BACK.
   - CUT OFF APPROXIMATELY 100mm OF CABLE FROM EACH END.
   - PROCEED TO STEP 2.

2. SELECT APPROPRIATE SLEEVE AND DIE ACCORDING TO DRAWING CD210-21.

3. SELECT SPLICING METHOD (FOR CORRECT MANUFACTURED SPLICES, REFER TO TABLE ON SHEET 2 of 3).

   NOTE: FOR SPLICING BARE COPPER NEUTRAL WIRE TO INSULATED ALUMINUM CABLE, REFER TO DRAWING CD215-13.

4. REMOVE JACKET AND INSULATION FROM CABLES AS PER FIGURE 1 OR FOLLOW MANUFACTURERS INSTRUCTIONS; BE CAREFUL NOT TO NICK INSULATION OR CONDUCTOR.

5. CLEAN CONDUCTOR WITH WIRE BRUSH. INSTALL CONNECTOR.

   NOTE: EXCEPT FOR TAPED SPLICE, SLIDE TUBING OVER ONE CONDUCTOR BEFORE INSTALLING CONNECTOR.

APPROVED	REVISIONS			MANITOBA HYDRO DISTRIBUTION STANDARDS
ORIGINAL DRAWING SEALED BY E.H. WIEBE 94-07-03				**SPLICES FOR UNDERGROUND SECONDARY CABLES**
	96-05	2	NOTES REVISED, SHEET 3 ADDED	
	95-01	1	NOTES 3, 7 & TABLE ADDED	

DRAWN	CHECKED	DATE		SHT	REV
W.B./CAD	G.W.	93-07	**CD 215-12**	0001 OF 3	02

1-04431-DA-58043-0017

6. CLEAN JACKET (50mm), INSULATION, AND CONNECTOR WITH AN APPROVED CLEANING SOLVENT (S.C.# 43 11 95).

7. COMPLETE SELECTED SPLICE (AS CHOSEN IN STEP 3).
   NOTE: TO COMPLETE #4 CONCENTRIC NEUTRAL SPLICE, PROCEED TO STEP 8.

8. FOR #4 CONCENTRIC NEUTRAL CABLE: (CONT'D)
   a) APPLY 1 LAYER OF 1/4 STRETCHED 50mm WIDE RUBBER MASTIC TAPE (S.C.# 78 55 28) OVER CENTRE OF COMPLETED SPLICE.

   b) TRAIN TWISTED CONCENTRIC NEUTRAL WIRE (STEP 1b) INTO FINAL POSITION ALLOWING ADEQUATE CLEARANCE FOR MD6 PRESS.

   c) PLACE "C" TYPE COMPRESSION CONNECTOR OVER TWISTED WIRES AND CRIMP. REFER TO DRAWING CD210-24.

   d) TRIM OFF PROTRUDING WIRES AND COMPRESS WITH PLIERS ELIMINATING ANY SHARP ENDS.

   e) APPLY A 100mm STRIP OF 50mm WIDE RUBBER MASTIC TAPE OVER CONNECTOR AND PROTRUDING WIRES.
      NOTE: SHINY SIDE AGAINST CONNECTOR AND THE 100mm LENGTH PARALLEL TO CONNECTOR AND WIRE.

   f) FORM TAPED CONCENTRIC NEUTRAL CONNECTION AND WIRES AROUND SPLICE AND CABLE.

   g) APPLY 2 LAYERS 3/4 STRETCHED COLD WEATHER VINYL TAPE (S.C.# 78 55 98) OVER TAPED CONCENTRIC NEUTRAL CONNECTION AND SPLICE, APPROXIMATELY 50mm WIDE.

MANUFACTURED SPLICES FOR SECONDARY CABLES

CONDUCTOR SIZE	TYPE OF SPLICE	STORES CODE
#4 TO 1/0	RAYVOLVE OR PRESTRETCHED	85 13 10
4/0	RAYVOLVE OR PRESTRETCHED	85 13 40
4/0 TO 350	HEAT SHRINK	85 13 50
350	PRESTRETCHED	03 31 80

FOR TAPED SPLICE

TAPES SHALL ONLY BE APPLIED DIRECTLY FROM ROLL ONTO SPLICE, HALF LAPPED AND STRETCHED TO 3/4 OF THIER ORIGINAL WIDTH.

1. APPLY 3 LAYERS OF SELF-AMALGAMATING ETHYLENE PROPYLENE RUBBER (E.P.R.) TAPE (S.C. 78 55 23) AS PER FIGURE 2.

2. APPLY 2 LAYERS OF COLD WEATHER VINYL TAPE (S.C. 78 55 98) AS PER FIGURE 2.

   OR

   APPLY 3 LAYERS OF SELF-AMALGAMATING HIGH TEMPERATURE SILICONE TAPE (S.C. 03 74 67). VINYL TAPE IS NOT REQUIRED.

NOTE:
DIMENSIONS SHOWN ARE MILLIMETRES.

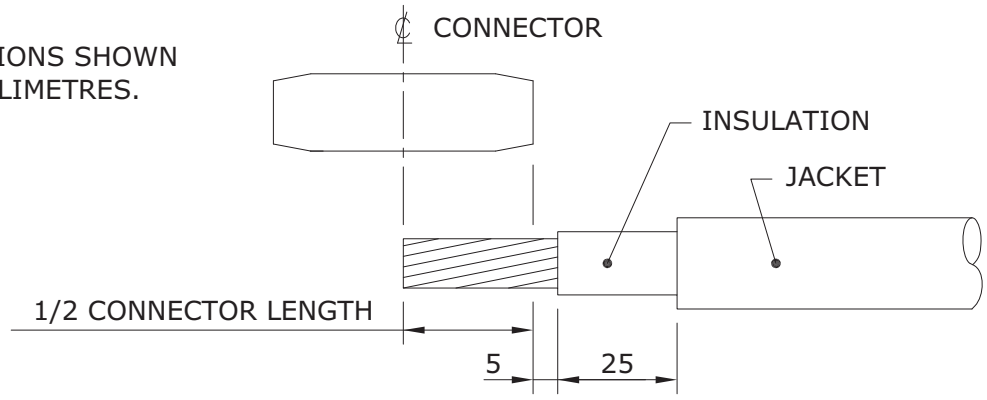

FIGURE 1

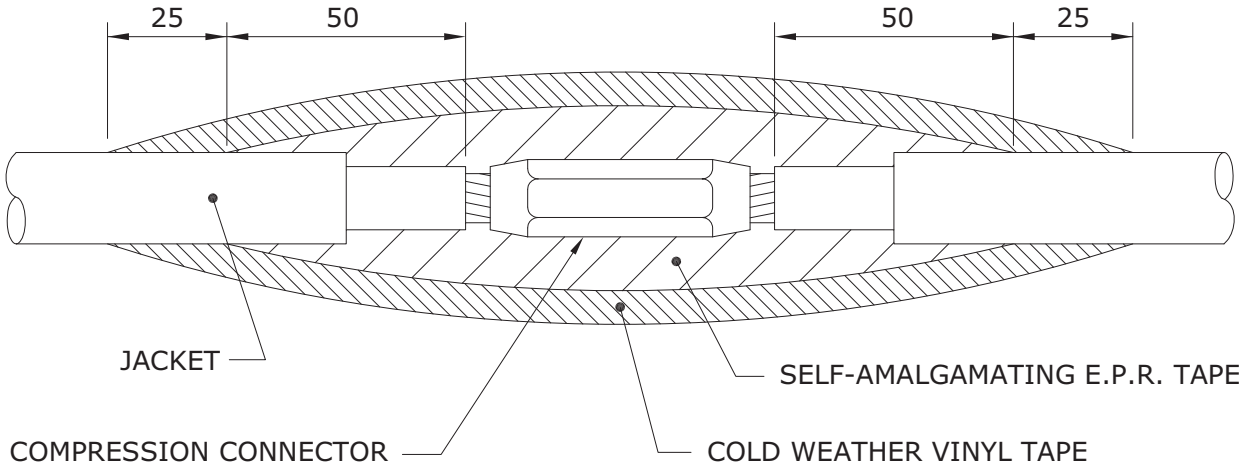

FIGURE 2

APPROVED	REVISIONS			MANITOBA HYDRO DISTRIBUTION STANDARDS
ORIGINAL DRAWING SEALED BY E.H. WIEBE 97-01-08	10-12	1	REVISED COMPRESSION CONNECTOR AND NOTE 2	**SPLICES FOR UNDERGROUND SECONDARY CABLES**

DRAWN	CHECKED	DATE		SHT	REV
W.B./CAD	K.C.H.	96-05	**CD 215-12**	0003 OF 3	01

1-04431-DA-58043-0017

CABLE PREPARATION:

1. REMOVE PVC (POLYVINYL CHLORIDE) JACKET TO DIMENSION "A" PLUS 25mm.

2. REMOVE POLYETHYLENE INSULATION TO DIMENSION "A" PLUS 5mm.
USE ABRASIVE TAPE (SC. 78 50 04) ON ALL CONNECTON SURFACES.

3. INSTALL ROD CONNECTOR AS PER TABLE BELOW AND FIGURE 1.

CONDUCTOR SIZE	* ROD CONNECTOR STORES CODE No.	PRESS	DIE
1/0 ALUMINUM	74 27 62	Y35/MD6	CSA 22
4/0 ALUMINUM	74 27 69	Y35/MD6	CSA 24

* ROD IS FACTORY CRIMPED INTO CONNECTOR

4. CONNECT BARE COPPER STRANDED WIRE TO ROD CONNECTOR AS PER TABLE BELOW. USE ABRASIVE TAPE ON ALL CONNECTON SURFACES.

CONDUCTOR SIZE	CONNECTOR STORES CODE No.	PRESS	DIE
COPPER ROD TO #4 COPPER STRANDED	74 40 90	Y35/MD6	WBG
COPPER ROD TO #2 COPPER STRANDED	74 40 70	MD6	WC

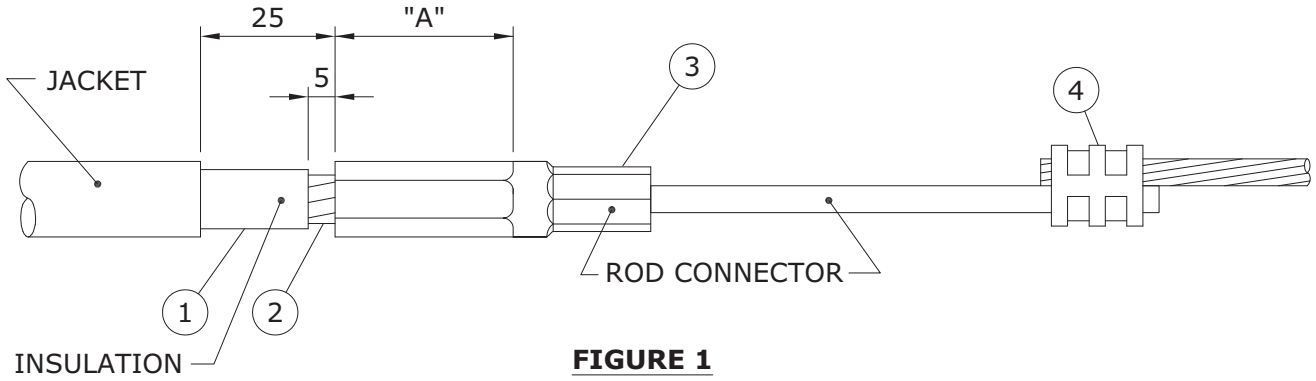

FIGURE 1

NOTE: DIMENSIONS SHOWN ARE MILLIMETRES.

APPROVED	REVISIONS			MANITOBA HYDRO DISTRIBUTION STANDARDS
ORIGINAL DRAWING SEALED BY E.H. WIEBE 94-07-03	08-11	2	REVISED TABLE AND COMPRESSION CONNECTOR	**SPLICING SECONDARY NEUTRAL (BARE COPPER TO INSULATED ALUMINUM)**
	94-10	1	ROD CONNECTOR ADDED	

DRAWN	CHECKED	DATE		SHT	REV
W.B./CAD	B.H./K.C.H.	94-06	**CD 215-13**	0001 OF 2	02

1-04431-DA-58043-0018

TAPING:

5. ABRADE ROD PORTION OF ROD CONNECTOR WITH ABRASIVE TAPE AS SHOWN IN FIGURE 2.

6. CLEAN JACKET, INSULATION & ROD CONNECTOR WITH AN APPROVED CLEANING SOLVENT (S.C.# 43 11 95).

7. CUT ONE PIECE OF RUBBER MASTIC TAPE (S.C. 78 55 28) INTO EITHER A 50mm WIDE x 75mm LONG STRIP FOR 1/0 CONNECTOR OR A 50mm WIDE x 125mm LONG STRIP FOR 4/0 CONNECTOR.

8. APPLY THE PRECUT STRIP OF RUBBER MASTIC TAPE 1/4 STRETCHED, SHINING SIDE DOWN ONTO THE ROD AS SHOWN IN FIGURE 2.

9. APPLY 2 LAYERS OF HALF LAPPED 3/4 STRETCHED SELF AMALGAMATING ETHYLENE PROPYLENE RUBBER TAPE (S.C.# 78 55 23) AS SHOWN IN FIGURE 2.

10. APPLY 2 LAYERS OF HALF LAPPED 3/4 STRETCHED COLD WEATHER VINYL TAPE (S.C.# 78 55 98) AS SHOWN IN FIGURE 2.

NOTE:

WHEN INSTALLING A MANUFACTURED SPLICE INCLUDE STEPS 5 THRU 8 WITH THE MANUFACTURERS INSTRUCTIONS. THIS WILL PROVIDE THE PROPER INSULATION AND MOISTURE SEAL.

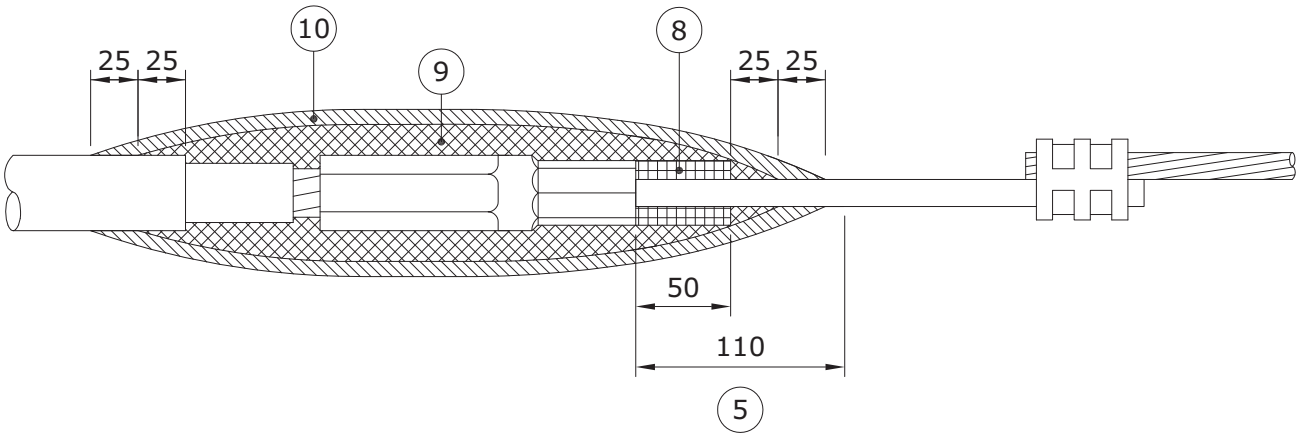

FIGURE 2

NOTE: DIMENSIONS SHOWN ARE MILLIMETRES.

APPROVED	REVISIONS			MANITOBA HYDRO DISTRIBUTION STANDARDS
ORIGINAL DRAWING SEALED BY E.H. WIEBE 94-07-03	08-11	2	REVISED NOTE 6 & COMPRESSION CONNECTOR	**SPLICING SECONDARY NEUTRAL (BARE COPPER TO INSULATED ALUMINUM)**
	94-10	1	TAPING PROCEDURE REVISED	

DRAWN	CHECKED	DATE		SHT	REV
W.B./CAD	K.C.H.	94-06	**CD 215-13**	0002 OF 2	02

1-04431-DA-58043-0018

7.7 - 10.7 STREET LIGHT POLES

NOTES:

1. FOR FUTURE ACCESS TO LOWER PORTION OF PLASTIC PIPE, LOCATE "V" GROOVE SIDE OF BASE TO ROADWAY PROVIDED THAT:

   a) A MIN. HORIZONTAL SEPARATION OF 350mm IS MAINTAINED TO ANY PAVED SURFACE OR STRUCTURE; OR

   b) IF LESS THAN 350mm, ROTATE BASE 90°

2. ROUTE UNDERGROUND CABLES DIRECTLY INTO PLASTIC PIPE.
3. IN BACKFILL AREA, ENCASE UNDERGROUND CABLES IN A 75mm RADIUS ENVELOPE OF EXCAVATED MATERIAL OR SAND TO PROTECT CABLES. DO NOT BACKFILL WITH EXCAVATED MATERIAL OR SAND MORE THAN 1/6 OF THE WAY AROUND BASE.
4. SEE CD300-9 FOR ANCHOR ROD TIGHTENING METHOD.
5. DIMENSIONS SHOWN ARE MILLIMETRES.

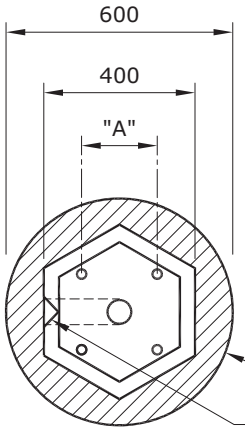

PLAN

"A" BOLT SQUARE	STORES CODE
179	54 11 59
197	54 13 79
206	54 14 89

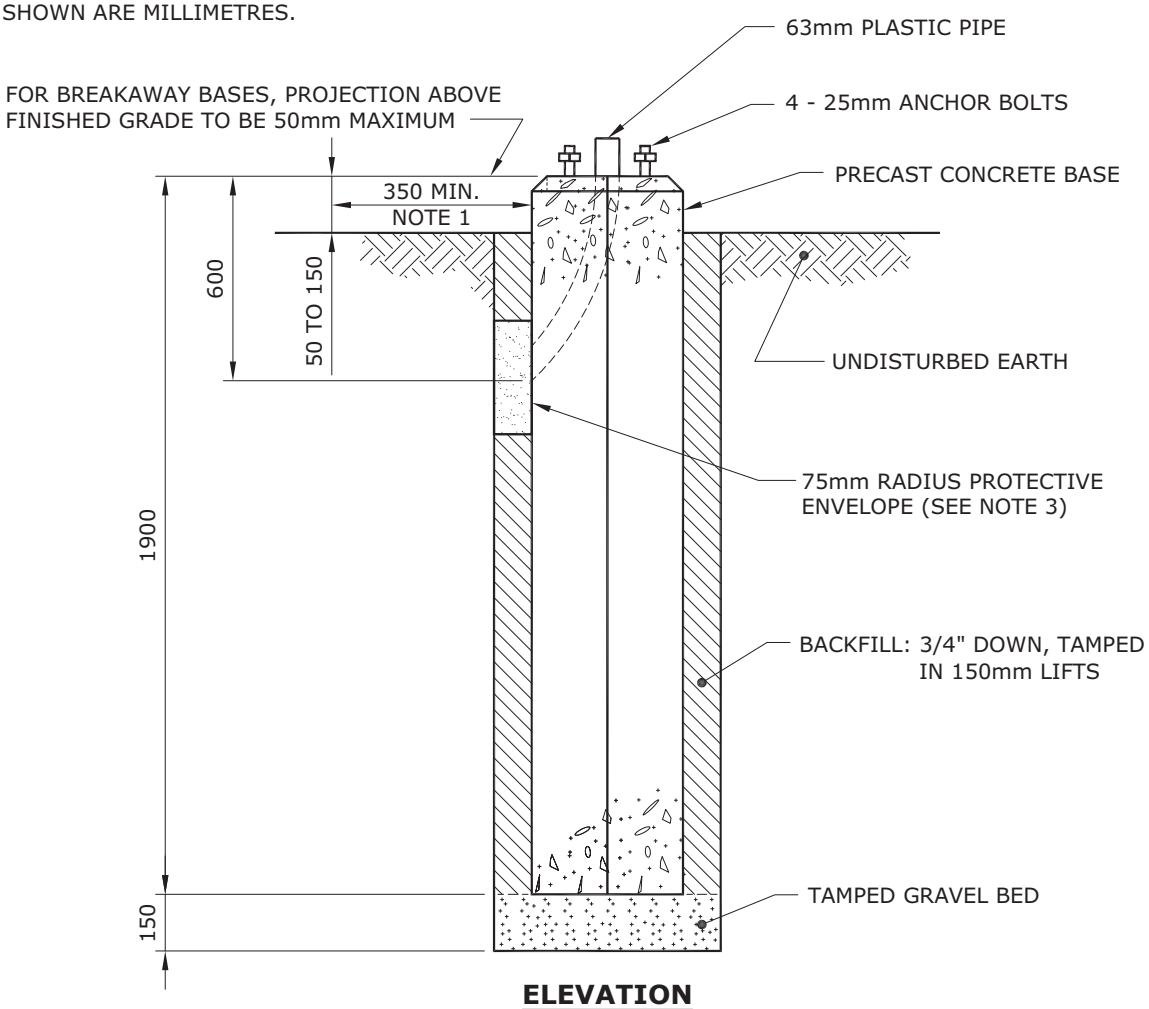

ELEVATION

APPROVED	REVISIONS			MANITOBA HYDRO DISTRIBUTION STANDARDS
ORIGINAL DRAWING SEALED BY E.H. WIEBE 89-04-29	10-08	3	CHANGED BACKFILL NOTES, AND ADDED SHEET 3	**INSTALLATION OF PRECAST CONCRETE BASE**
	99-05	2	SHEET 2 of 2 ADDED, 7.7 - 10.7 STREET LIGHT ADDED	
	96-10	1	V-GROOVE LOCATION, POLY PIPE SIZE NOTES CHANGED	

DRAWN	CHECKED	DATE		SHT	REV
W.B./CAD	L.D./K.C.H.	88-06	**CD 300-6**	0001 OF 3	03

1-04431-DA-24620-0001

13.7 STREET LIGHT POLE

NOTES:

1. FOR FUTURE ACCESS TO LOWER PORTION OF PLASTIC PIPE, LOCATE "V" GROOVE SIDE OF BASE TO ROADWAY PROVIDED THAT:

   a) A MIN. HORIZONTAL SEPARATION OF 350mm IS MAINTAINED TO ANY PAVED SURFACE OR STRUCTURE; OR

   b) IF LESS THAN 350mm, ROTATE BASE 90°

2. ROUTE UNDERGROUND CABLES DIRECTLY INTO PLASTIC PIPE.
3. IN BACKFILL AREA, ENCASE UNDERGROUND CABLES IN A 75mm RADIUS ENVELOPE OF EXCAVATED MATERIAL OR SAND TO PROTECT CABLES. DO NOT BACKFILL WITH EXCAVATED MATERIAL OR SAND MORE THAN 1/6 OF THE WAY AROUND BASE.
4. SEE CD300-9 FOR ANCHOR ROD TIGHTENING METHOD.
5. DIMENSIONS SHOWN ARE MILLIMETRES.

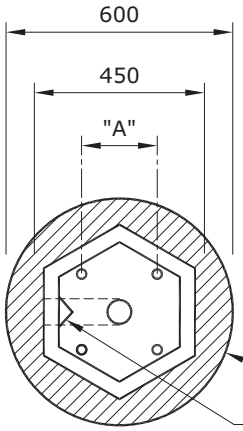

PLAN

"A" BOLT SQUARE	STORES CODE
243	00 06 67

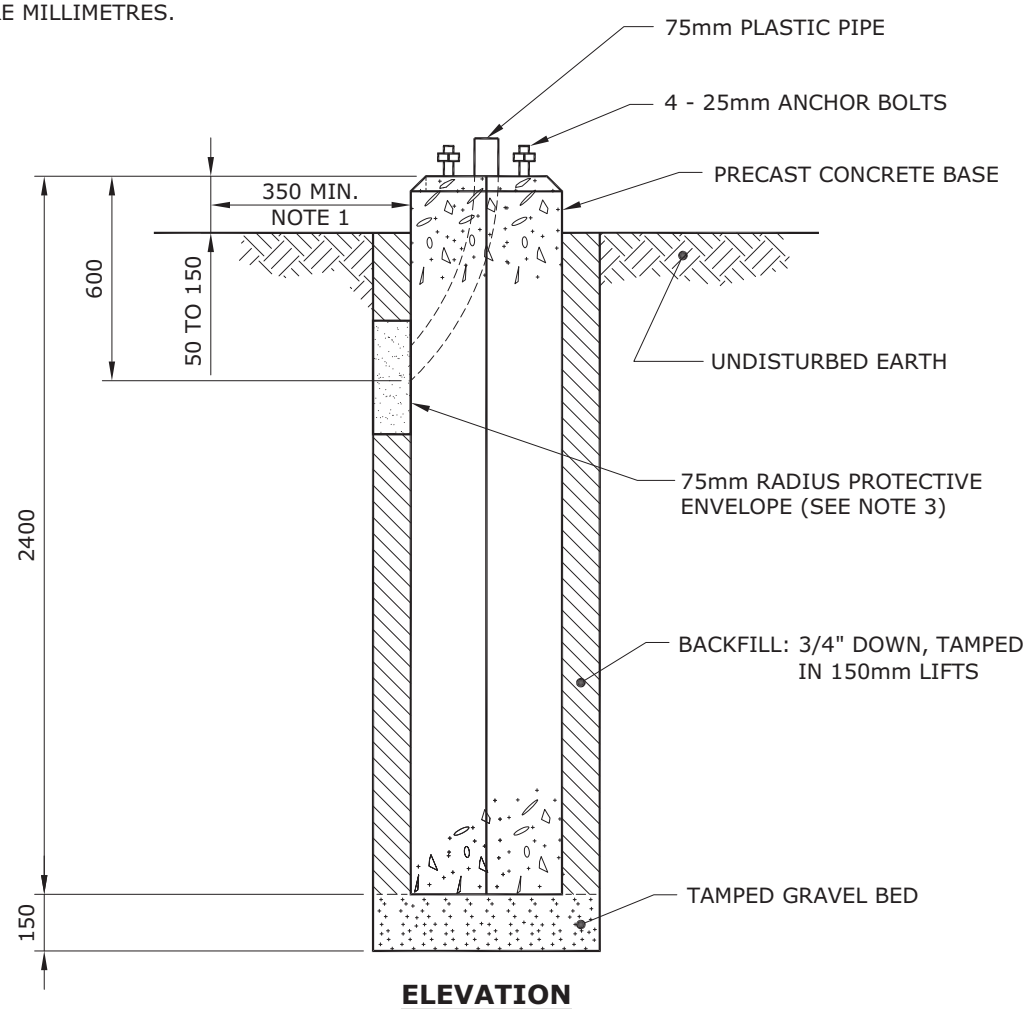

ELEVATION

APPROVED	REVISIONS			MANITOBA HYDRO DISTRIBUTION STANDARDS
ORIGINAL DRAWING SEALED BY E.H. WIEBE 89-04-29	10-08	1	CHANGED BACKFILL NOTES, AND ADDED SHEET 3	**INSTALLATION OF PRECAST CONCRETE BASE**

DRAWN	CHECKED	DATE		SHT	REV
R.L.B./CAD	L.D./K.C.H.	99-05	**CD 300-6**	0002 OF 3	01

1-04431-DA-24620-0001

16.8m & 19.8m STREET LIGHT POLE

NOTES:

1. FOR FUTURE ACCESS TO LOWER PORTION OF PLASTIC PIPE, LOCATE "V" GROOVE SIDE OF BASE TO ROADWAY PROVIDED THAT:
   a) A MIN. HORIZONTAL SEPARATION OF 350mm IS MAINTAINED TO ANY PAVED SURFACE OR STRUCTURE; OR
   b) IF LESS THAN 350mm, ROTATE BASE 90°
2. ROUTE UNDERGROUND CABLES DIRECTLY INTO PLASTIC PIPE.
3. IN BACKFILL AREA, ENCASE UNDERGROUND CABLES IN A 75mm RADIUS ENVELOPE OF EXCAVATED MATERIAL OR SAND TO PROTECT CABLES. DO NOT BACKFILL WITH EXCAVATED MATERIAL OR SAND MORE THAN 1/6 OF THE WAY AROUND BASE.
4. SEE CD300-9 FOR ANCHOR ROD TIGHTENING METHOD.
5. DIMENSIONS SHOWN ARE MILLIMETRES.

"A" BOLT CIRCLE	STORES CODE
418	02 19 69

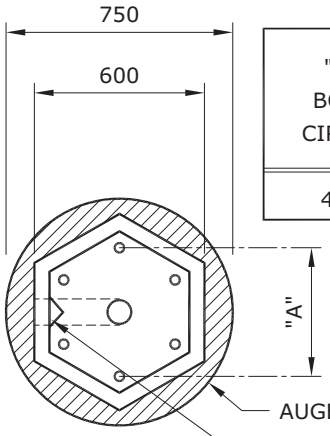

PLAN

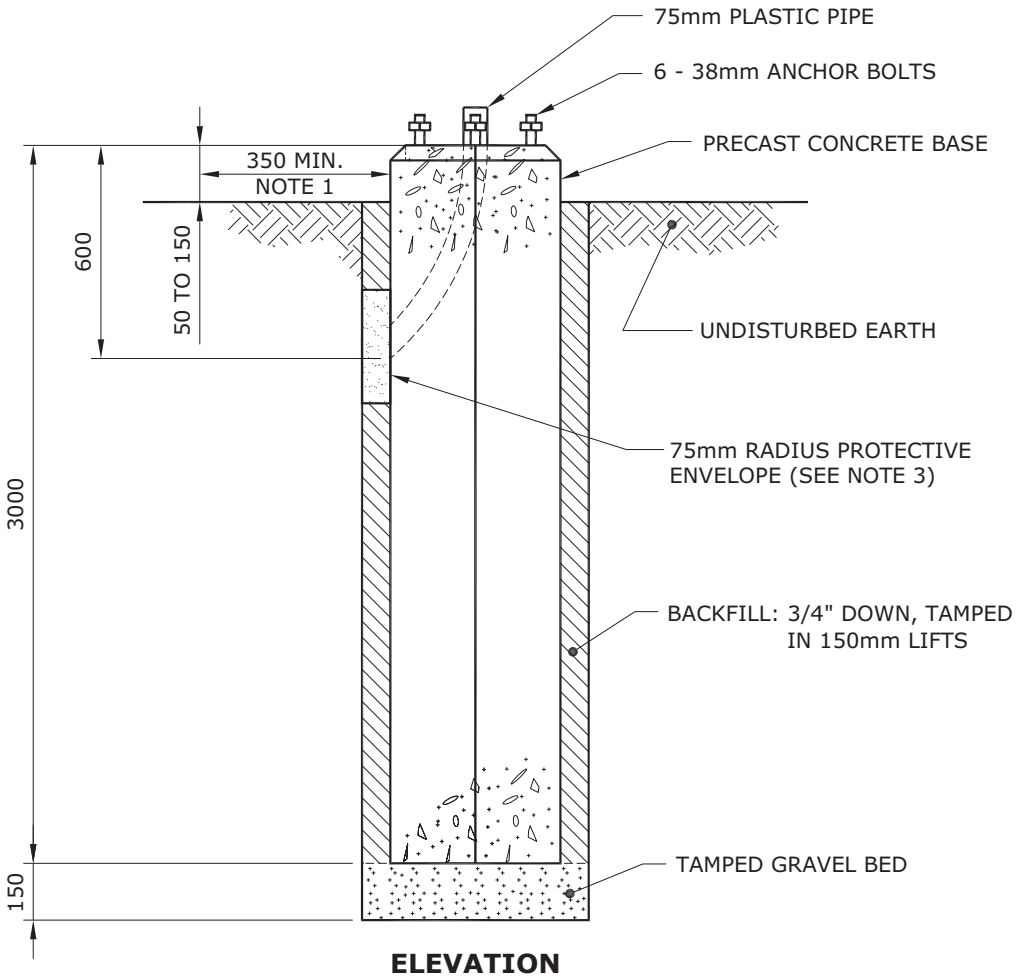

ELEVATION

APPROVED	REVISIONS	MANITOBA HYDRO DISTRIBUTION STANDARDS
ORIGINAL DRAWING SEALED BY K.C. HAMILTON 10-08-13		**INSTALLATION OF PRECAST CONCRETE BASE**

DRAWN	CHECKED	DATE		SHT	REV
C.A.	L.D./K.C.H.	10-08	**CD 300-6**	0003 OF 3	00

1-04431-DA-24620-0001

TO DEVELOP THE REQUIRED TENSION ON ANCHOR RODS, THE TURN-OF-NUT METHOD IS USED.

TURN-OF-NUT

1. ENSURE ALL ANCHOR RODS AND NUTS ARE FREE OF DEBRIS AND THAT THE ANCHOR RODS ARE LUBRICATED.

2. PLACE POLE ONTO CONCRETE PILE, INSTALL WASHERS AND NUTS AND TIGHTEN UNTIL DEVELOPING A SNUG-TIGHTENED CONNECTION.

   SNUG-TIGHTENED: THE TIGHTNESS THAT IS ATTAINED AFTER A FEW IMPACTS OF AN IMPACT WRENCH OR THE FULL FORCE OF A WORKER USING AN ORDINARY ONE FOOT LONG WRENCH.

3. TIGHTENING OF THE BOLTS MUST BE PERFORMED IN A MANNER THAT BRINGS THE FAYING SURFACES UP "EVENLY" AS PER THE STAR PATTERN TIGHTENING SEQUENCE.

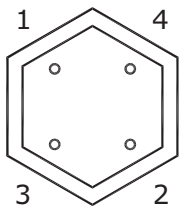

FOUR ANCHOR BOLT PATTERN
(13.7m AND BELOW)

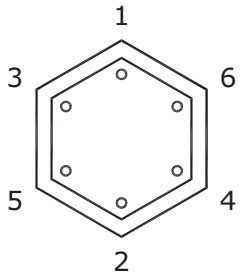

SIX ANCHOR BOLT PATTERN
(16.8m AND 19.8m)

4. ENSURE THE POLE IS PLUMB AND ADD LEVELING SHIMS IF REQUIRED. SNUG-TIGHTEN THE ANCHOR BOLTS AGAIN.

5. BEVELED WASHERS ARE REQUIRED IF THE NUT CANNOT BE BROUGHT INTO FIRM CONTACT WITH THE BASE PLATE.

6. MARK THE REFERENCE LOCATION OF THE NUT AFTER SNUG-TIGHTENING THE PLUMB POLE.

7. FINAL TIGHTENING OF NUTS IS PERFORMED IN INCREMENTS AS PER THE STAR PATTERN, WITH A MINIMUM OF TWO FULL TIGHTENING CYCLES. PROPER TENSIONING IS ACHIEVED WHEN THE NUT IS ROTATED 1/3 OF A TURN BEYOND SNUG-TIGHT. THE TOLERANCE FOR THIS IS PLUS 20°.

APPROVED	REVISIONS	MANITOBA HYDRO DISTRIBUTION STANDARDS
ORIGINAL DRAWING SEALED BY K.C. HAMILTON 10-08-13		**METHOD FOR ANCHOR ROD TIGHTENING**

DRAWN	CHECKED	DATE		SHT	REV
C.A.	L.D.	10-08	**CD 300-9**	0001 OF 1	00

1-04431-DA-24620-0006

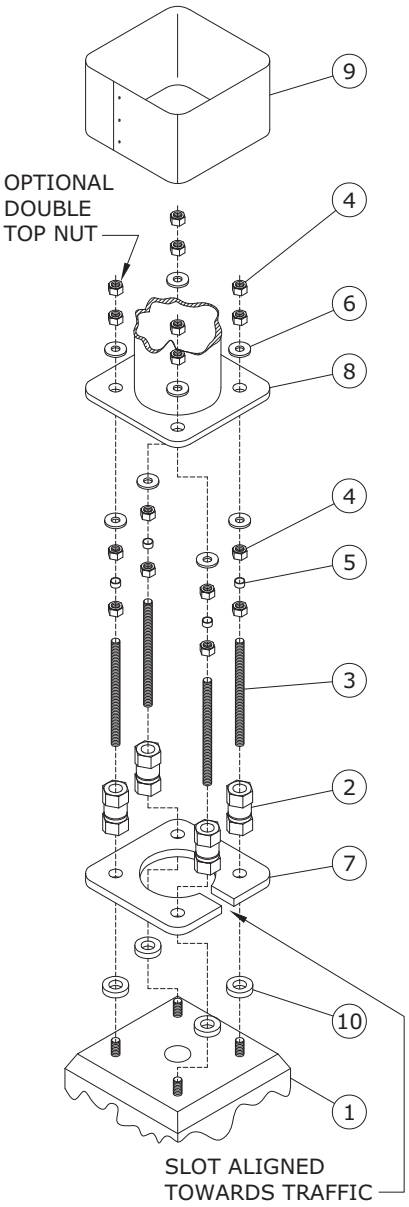

THE FOLLOWING INSTALLATION INSTRUCTIONS ARE APPLICABLE TO NEW OR EXISTING BREAKAWAY BASE INSTALLATIONS ON CONCRETE BASES.

PROCEDURE:

1. CLEAN THE TOP SURFACE OF THE CONCRETE BASE AND ENSURE SURFACE IS FLAT AND LEVEL WITH NO SPALLING OR OTHER SURFACE CONDITIONS THAT MAY AFFECT THE PERFORMANCE OF THE COUPLERS.
2. THE PREFERRED MAXIMUM HEIGHT ABOVE LEVEL GRADE TO THE BASE OF THE COUPLER IS 50mm OR LESS. THIS PROVIDES THE RECOMMENDED CLEARANCE IN THE EVENT OF A COLLISION WITH THE STRUCTURE.
3. MEASURE THE HEIGHT OF THE THREADED ANCHOR BOLTS ABOVE THE REACTION PLATE AND VERIFY THIS MEASUREMENT IS BETWEEN 1 1/4" AND 1 5/8".
4. IF THE EXPOSED LENGTH OF THE ANCHOR BOLT IS GREATER THAN THE RECOMMENDED LENGTH, OPTIONAL SPACERS MAY BE USED (ITEM 10).
5. IT IS RECOMMENDED THAT THE THREADED ANCHOR BOLT-COUPLER CONNECTION BE COATED WITH RUST-INHIBITING GREASE. THIS WILL FACILITATE REMOVAL OF THE COUPLER WHEN IT IS NECESSARY. A SUITABLE PRODUCT FOR THIS APPLICATION IS ARCAN 1, A WHITE, WATER RESISTANT GREASE MARKETED BY IMPERIAL OIL LTD.
6. THREAD THE COUPLER ASSEMBLY ON EACH ANCHOR BOLT (IF THE COUPLER ASSEMBLY UPPER STUD BECOMES LOOSE AS A RESULT OF HANDLING, ENSURE THAT THE STUD IS ENGAGED AT LEAST 38mm BUT NOT MORE THAN 44mm IN THE COUPLER BEFORE LOCKING WITH THE LOCK NUT.)
7. SUNG UP EACH COUPLER AGAINST THE CONCRETE BASE. TIGHTEN EACH COUPLER ALTERNATELY AND INCREMENTALLY, BY MEANS OF A WRENCH OR A PIPE WRENCH ON THE BOTTOM HEX OF THE COUPLER. USE THE TURN-OF-NUT METHOD AS PER CD300-9.
   NOTE: TIGHTENING THE COUPLER ON THE TOP HEX MAY WEAKEN THE COUPLER AT THE MACHINED GROOVE AND MAKE THE COUPLER UNUSEABLE.
8. BRING THE LEVELING NUTS (AND HENCE, THE LOWER WASHERS) INTO A LEVEL PLANE AS DESIRED MAKING CERTAIN THAT AT LEAST ONE PLASTIC SPACER REMAINS IN CONTACT WITH ITS LEVELING NUT AND ITS LOCK NUT.
9. PLACE THE POLE BASE OVER THE PROTRUDING STUDS, AND SECURE THE POLE WITH THE UPPER WASHERS AND RETAINING NUTS.
10. WITH THE POLE IN THE REQUIRED VERTICAL ORIENTATION, AND BEFORE FINAL TIGHTENING, ENSURE THAT ALL LEVELING NUTS, RETAINING NUTS AND UPPER AND LOWER WASHERS ARE MADE SNUG AGAINST THE POLE BASE PLATE.
11. TIGHTEN THE RETAINING NUTS WITH THE TURN-OF-NUT METHOD AS PER CD300-9.
12. MAKE THE NECESSARY WIRING CONNECTIONS, AND INSTALL THE PROTECTIVE SHROUD.

APPROVED	REVISIONS			MANITOBA HYDRO DISTRIBUTION STANDARDS
ORIGINAL DRAWING SEALED BY E.H. WIEBE 89-04-28	10-08	3	UPDATED STANDARD, REVISED TITLE, AND ADDED SHEET 2	**BREAKAWAY BASE INSTALLATION**
	07-06	2	REVISED NOTE 4 AND ADDED NOTE 5	
	94-07	1	REVISED NOTE 4	

DRAWN	CHECKED	DATE		SHT	REV
C.A.	L.D./K.C.H.	88-06	**CD 300-10**	0001 OF 2	03

1-04431-DA-24620-0004

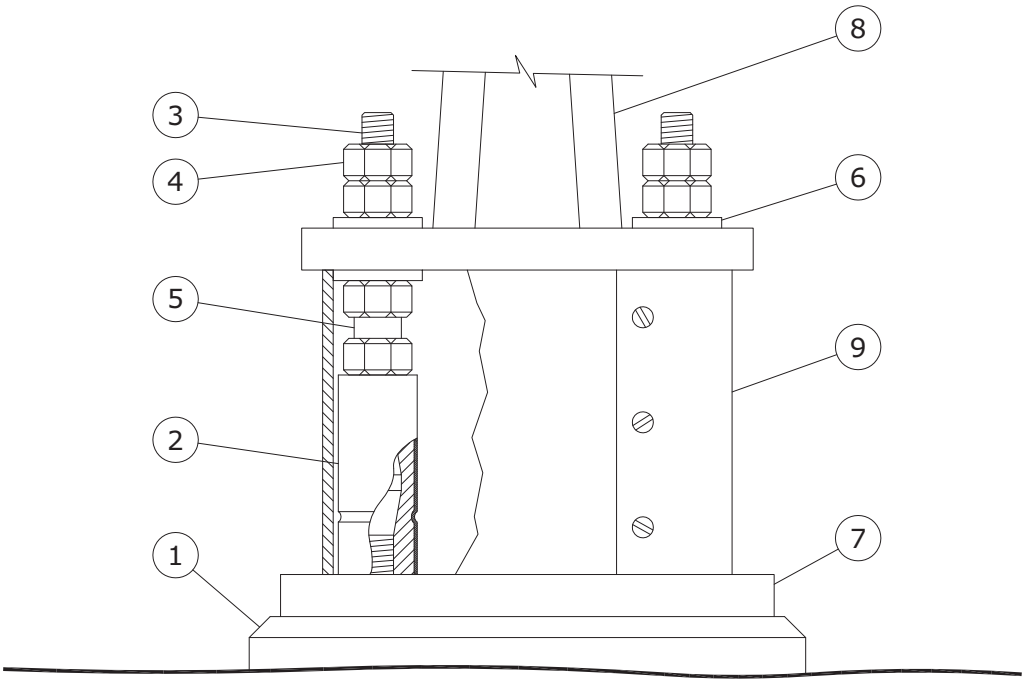

BILL OF MATERIAL		
ITEM NO.	DESCRIPTION	QUANTITY
1	CONCRETE BASE	1
2	COUPLING	4
3	1" - 8 UNC GALV. STUD	4
4	1" - 8 UNC GALV. HEAVY HEX NUT	16
5	SPACER	4
6	1" GALV. FLAT WASHER	8
7	REACTION PLATE	1
8	POLE	1
9	SHROUD ASSEMBLY	1
10	GALV. SHIM	4

APPROVED	REVISIONS	MANITOBA HYDRO DISTRIBUTION STANDARDS		
ORIGINAL DRAWING SEALED BY K.C. HAMILTON 10-08-13		**BREAKAWAY BASE INSTALLATION**		
DRAWN C.A.	CHECKED L.D.	DATE 10-08	**CD 300-10**	SHT 0002 OF 2 / REV 00

1-04431-DA-24620-0004

TRENCH AND PLOW-IN LOCATION

GENERALLY, THE TRENCH LOCATION WILL DICTATE THE LOCATION OF THE LIGHT STANDARDS. CONTACT SHALL BE MADE WITH THE GOVERNING MUNICIPAL AUTHORITY TO DETERMINE THEIR SET BACK REQUIREMENTS. CONTACT SHALL ALSO BE MADE WITH THE CITY OF WINNIPEG UNDERGROUND STRUCTURES OR THE INDIVIDUAL UTILITIES OUTSIDE WINNIPEG TO DETERMINE THE EXISTENCE AND EXACT LOCATION OF OTHER UTILITIES PLANT. THIS INFORMATION WILL BE INCLUDED ON THE WORK ORDER PLANS.

DEPTH OF BURIAL

THE CABLE SHALL BE BURIED BELOW THE SURFACE OF THE EARTH A MINIMUM OF 600mm IN SODDED AREAS AND 1000mm IN ROADWAYS.

TRENCH DETAILS

TYPICAL TRENCH DETAILS FOR SODDED AREAS ARE SHOWN BELOW, FOR TRENCH DETAILS UNDER ROADWAYS REFER TO DRAWING CD205-14. SEE NOTES ON SHEET 2 of 2.

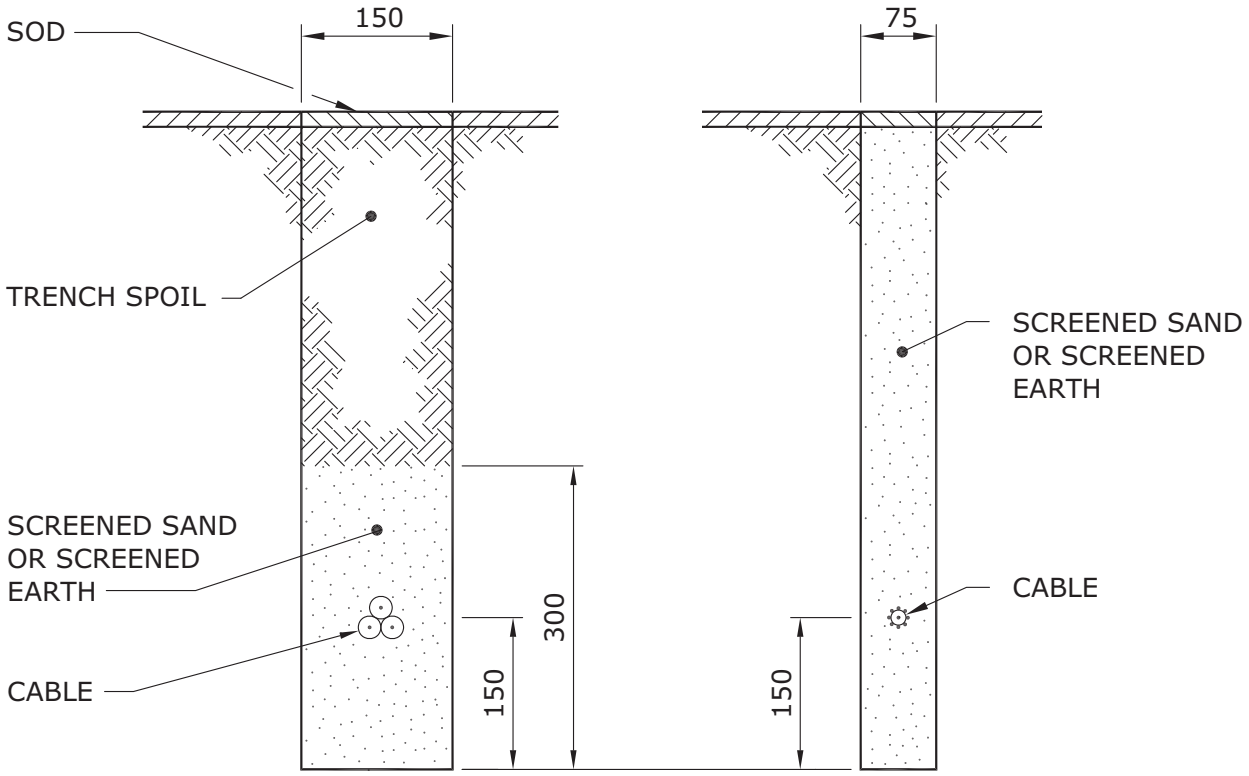

NOTE: DIMENSIONS SHOWN ARE MILLIMETRES.

APPROVED	REVISIONS			MANITOBA HYDRO DISTRIBUTION STANDARDS
ORIGINAL DRAWING SEALED BY E.H. WIEBE 89-04-28	96-01	3	ROADWAY DEPTH ADDED	**PLOWING AND TRENCHING DETAILS FOR UNDERGROUND STREET LIGHT CIRCUITS**
	95-09	2	BURIAL DEPTH NOTE ADDED	
	94-04	1	COMBINED WITH DWG. CD305-2	

DRAWN	CHECKED	DATE		SHT	REV
W.B./CAD		88-07	**CD 305-1**	0001 OF 2	03

1-04431-DA-10500-0016

NOTES:

1. FOR TYPICAL TRENCH DETAIL INSTALLATION UNDER ROADWAYS, REFER TO DRAWING CD205-14.

2. THESE ARE ALTERNATIVE TRENCH WIDTHS. A 75mm TRENCH IS PREFERABLE WHERE THE GROUND IS FIRM AND A CLEAN CUT CAN BE MADE. A 150mm TRENCH IS PREFERABLE WHERE THE GROUND IS TOO LOOSE TO MAINTAIN A FIRM TRENCH WALL.

3. THE CABLES INDICATED IN THE VIEWS CAN BE USED IN EITHER TRENCH.

4. THE 75mm TRENCH SHALL BE BACKFILLED WITH SCREENED SAND OR SCREENED EARTH.

5. THE 150mm TRENCH SHALL BE BACKFILLED WITH THE TRENCH SPOIL IF IT IS FREE FROM ROCKS OR DEBRIS. IF THE TRENCH SPOIL CONTAINS ROCKS OR DEBRIS, SCREENED SAND OR SCREENED EARTH SHALL BE INSTALLED AS SHOWN.

APPROVED	REVISIONS			MANITOBA HYDRO DISTRIBUTION STANDARDS
ORIGINAL DRAWING SEALED BY E.H. WIEBE 89-04-28				**PLOWING AND TRENCHING DETAILS FOR UNDERGROUND STREET LIGHT CIRCUITS**
	96-01	2	NOTES REVISED	
	94-04	1	COMBINED WITH DWG. CD305-2	

DRAWN	CHECKED	DATE		SHT	REV
W.B./CAD		88-07	**CD 305-1**	0002 OF 2	02

1-04431-DA-10500-0016

1. **GENERAL**

PLOWED-IN CABLES SHALL BE PULLED TO 1m ABOVE GRADE AT EACH STREET LIGHT STANDARD LOCATION. THE CABLE DEPTH SHALL BE MAINTAINED AT THE 600mm PLOW DEPTH AS CLOSE AS POSSIBLE TO THE STREET LIGHT STANDARD LOCATION BEFORE RAISING THE PLOW. THE PLOW SHALL BE RETURNED TO THE 600mm PLOW DEPTH AS CLOSE AS POSSIBLE TO THE CENTRE LINE OF THE STREET LIGHT STANDARD LOCATION.

CABLES LAID IN TRENCHES SHALL HAVE SUFFICIENT SLACK TO ALLOW FOR FUTURE MOVEMENT OR SETTLING OF THE TRENCH FLOOR. CABLES SHALL PROJECT 1m ABOVE GRADE AT EACH LOCATION.

2. **USE OF POLYETHYLENE PIPE**

2.1 WHERE CABLES ARE INSTALLED UNDER EXISTING PAVEMENT, POLYETHYLENE PIPE SHALL BE INSTALLED TO PROTECT THE CABLES IF THE HOLE IS AUGERED OR PUSHED THROUGH MATERIAL CONTAINING ROCKS, STONES, OR DEBRIS.

2.2 AT THE JUNCTION OF THE MAIN TRENCH AND THE STREET OR DRIVEWAY CROSSING, THE BOTTOM OF THE TRENCH SHALL BE BACKFILLED AND TAMPED TO THE LEVEL OF THE POLYETHYLENE PIPES TO PREVENT SHARP BENDS IN THE CABLE AND TRAPPING OF WATER IN THE PIPE.

3. **SPLICES - UNDERGROUND CABLES**

UNDERGROUND STREET LIGHT CABLES (i.e. #4 ALUMINUM CONCENTRIC NEUTRAL CABLE AND 1/0 TRIPLEXED CABLE) ARE TO BE SPLICED USING AN APPROPRIATE COMPRESSION SLEEVE (SEE DRAWING CD210-21) AND THE SPLICE IS TO BE INSULATED USING ONE OF THE FOLLOWING METHODS:

1) RAYCHEM RAYVOLVE SPLICE
2) PRE-STRETCHED INSULATING TUBING SPLICE
3) HEAT SHRINK INSULATING TUBING SPLICE
4) TAPED SPLICE

FOR COMPLETE INSTRUCTIONS REGARDING THE ABOVE SPLICES, REFER TO DRAWING CD215-12.

APPROVED	REVISIONS			MANITOBA HYDRO DISTRIBUTION STANDARDS		
ORIGINAL DRAWING SEALED BY E.H. WIEBE 89-04-28	94-04	1	DWG. REFERENCE CHANGED	**INSTALLATION OF STREET LIGHT CABLES**		
DRAWN W.B./CAD	CHECKED W.C.	DATE 88-07		**CD 310-1**	SHT 0001 OF 2	REV 01

1-04431-DA-56200-0001

4. **CABLE END CAPS**

STREET LIGHT CABLES WHICH ARE NOT GOING TO BE SPLICED OR TERMINATED IMMEDIATELY FOLLOWING INSTALLATION SHALL BE CUT SQUARE AND SEALED WITH AN END CAP. REFER TO DRAWING CD215-21 FOR DETAILS.

5. **GROUNDING OF STREET LIGHT STANDARDS**

5.1 ALL STREET LIGHT STANDARDS SHALL BE GROUNDED BY CONNECTING THE NEUTRAL TO THE GROUND STUD INSIDE THE STANDARD. REFER TO DRAWING CD310-4 FOR DETAILS.

5.2 A GROUND ROD SHALL BE INSTALLED AND CONNECTED TO THE GROUND STUD AT THE LAST STANDARD ON THE STREET LIGHT CIRCUIT.

APPROVED	REVISIONS			MANITOBA HYDRO DISTRIBUTION STANDARDS		
ORIGINAL DRAWING SEALED BY E.H. WIEBE 89-04-28	94-04	1	DWG. REFERENCE CHANGED	**INSTALLATION OF STREET LIGHT CABLES**		
DRAWN W.B./CAD	CHECKED W.C.	DATE 88-07		**CD 310-1**	SHT 0002 OF 2	REV 01

1-04431-DA-56200-0001

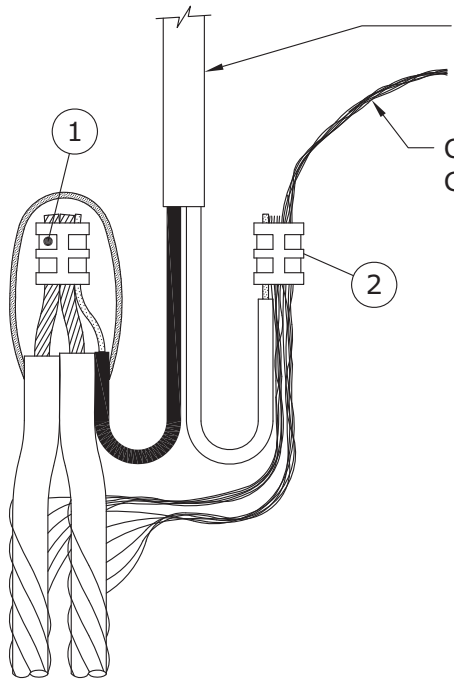

No. 4 ALUMINUM C/N CABLE

(TYPICAL FEED THROUGH)

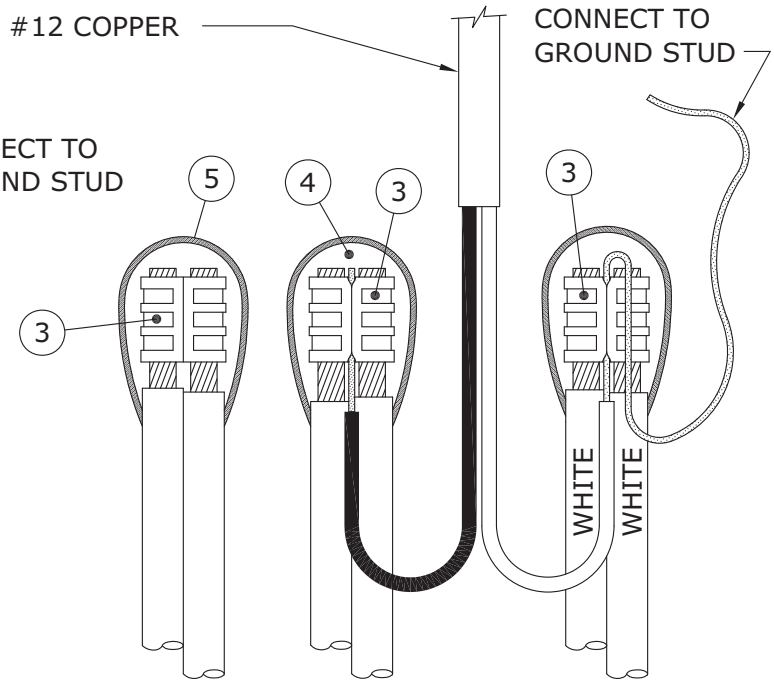

1/0 ALUMINUM TRIPLEX CABLE

(TYPICAL FEED THROUGH)

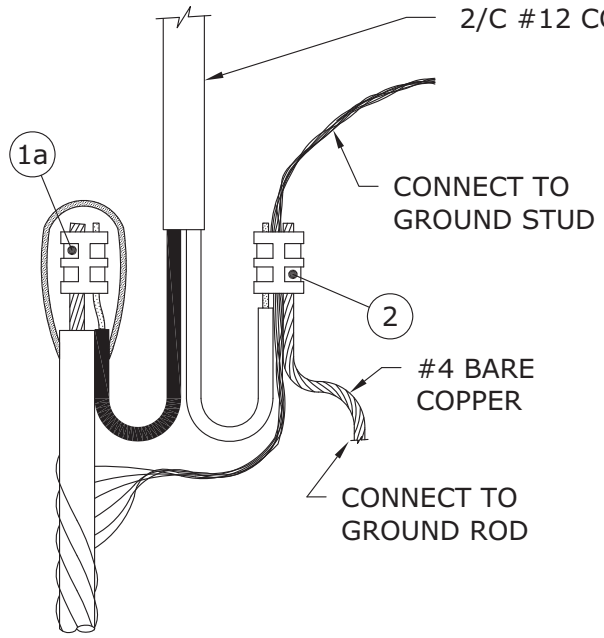

No. 4 ALUMINUM C/N CABLE

(TYPICAL END OF CIRCUIT)

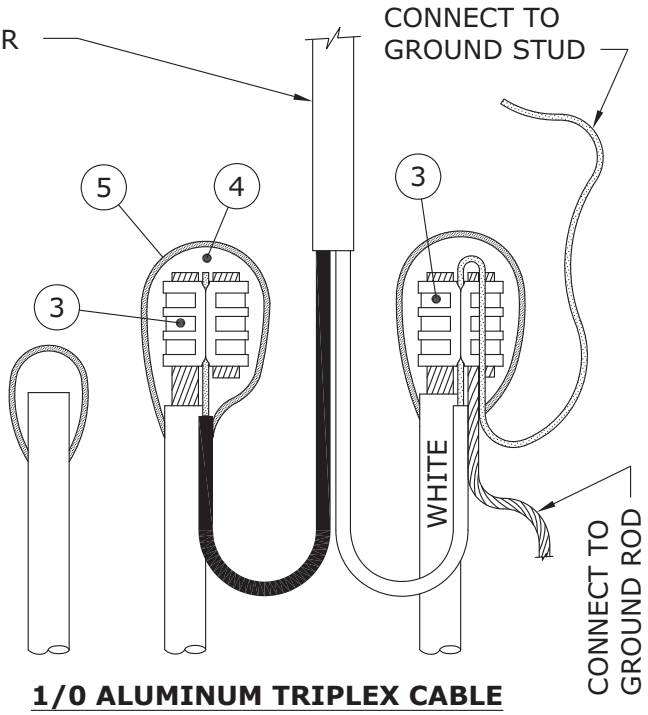

1/0 ALUMINUM TRIPLEX CABLE

(TYPICAL END OF CIRCUIT)

APPROVED	REVISIONS			MANITOBA HYDRO DISTRIBUTION STANDARDS		
ORIGINAL DRAWING SEALED BY E.H. WIEBE 89-04-28	94-04	1	CONN. REVISED DUE TO INSUL. NEUTRAL	**CONNECTION DETAIL IN STEEL STREET LIGHT STANDARD**		
DRAWN W.B./CAD	CHECKED W.C.	DATE 88-07		**CD 310-4**	SHT 0001 OF 2	REV 01

1-04431-DA-56200-0002

BILL OF MATERIAL

ITEM No.	DESCRIPTION	STORES CODE No.		QUANTITY
		FOR USE WITH # 4 AL. C/N	FOR USE WITH 1/0 AL. TRIPLEX	
1	'C' TYPE AL. COMPRESSION TAP	74 41 30	---	1
1a	'H' TYPE AL. COMPRESSION TAP	74 40 10	---	1 *
2	'C' TYPE CU. COMPRESSION TAP	74 40 90	---	1
3	'H' TYPE AL. COMPRESSION TAP	---	74 40 60	3 **
4	TAPE, SELF-AMALGAMATING EPR	78 55 23	78 55 23	1/4 ROLL
5	TAPE, COLD WEATHER VINYL	78 55 98	78 55 98	1/4 ROLL

* FOR END OF CIRCUIT WHEN USING ONLY ONE CABLE.

** AT END OF CIRCUIT, QUANTITY MAY BE LESS THAN SHOWN.

NOTES:

1. **LEAVE SUFFICIENT SLACK ON CONDUCTORS TO ALLOW REMOVAL FROM HANDHOLE FOR MAINTENANCE.**
2. FOR PROPER TAPING PROCEDURE, REFER TO DRAWING CD215-12.

APPROVED	REVISIONS	MANITOBA HYDRO DISTRIBUTION STANDARDS
ORIGINAL DRAWING SEALED BY E.H. WIEBE 94-07-03		**CONNECTION DETAIL IN STEEL STREET LIGHT STANDARD**

DRAWN	CHECKED	DATE		SHT	REV
W.B./CAD	W.C.	94-05	**CD 310-4**	0002 OF 2	00

1-04431-DA-56200-0002

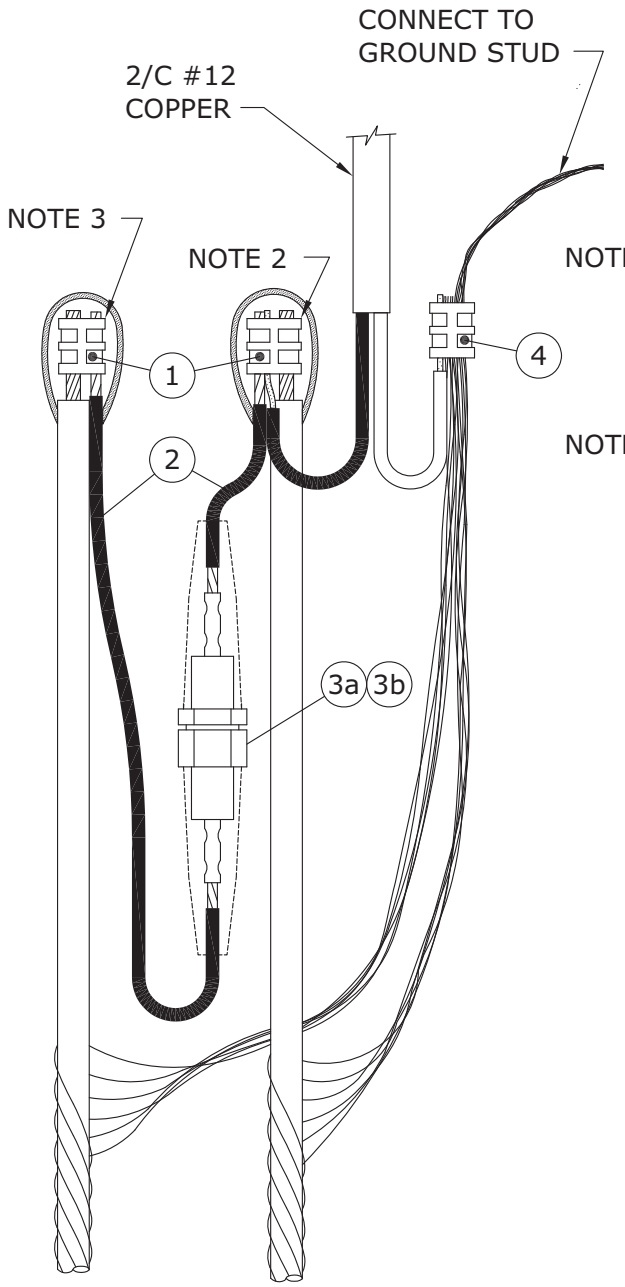

No. 4 ALUMINUM C/N CABLE

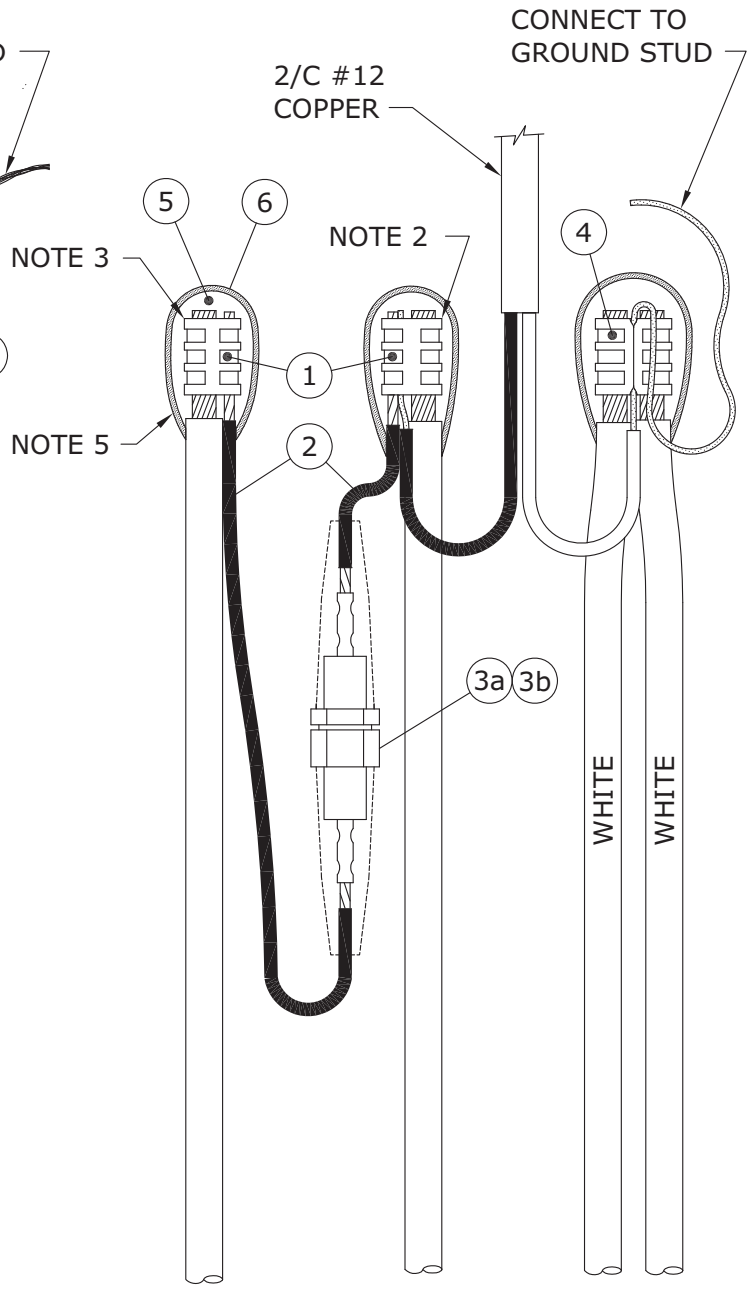

1/0 ALUMINUM TRIPLEX CABLE

APPROVED	REVISIONS			MANITOBA HYDRO DISTRIBUTION STANDARDS		
ORIGINAL DRAWING SEALED BY E.H. WIEBE 89-04-28	94-04	1	CONN. REVISED DUE TO INSUL. NEUTRAL	**STREET LIGHT CIRCUIT PROTECTED BY 30A FUSE IN STREET LIGHT STANDARD**		
DRAWN W.B./CAD	CHECKED W.C.		DATE 88-07	**CD 310-9**	SHT 0001 OF 2	REV 01

1-04431-DA-56200-0004

BILL OF MATERIAL

ITEM No.	DESCRIPTION	STORES CODE No.		QUANTITY
		FOR USE WITH # 4 AL. C/N	FOR USE WITH 1/0 AL. TRIPLEX	
1	'H' TYPE COMPRESSION TAP	74 40 10	74 40 30	2
2	WIRE, # 8 CU., 600V, PVC	93 10 08	93 10 08	1m
3a	FUSEHOLDER, 15/30A C/W BOOTS	31 91 30	31 91 30	1
3b	FUSE, 30A	31 14 30	31 14 30	1
4	'C' TYPE COMPRESSION TAP	74 40 90	---	1
	'H' TYPE COMPRESSION TAP	---	74 40 60	1 *
5	TAPE, SELF-AMALGAMATING EPR	78 55 23	78 55 23	1/4 ROLL
6	TAPE, COLD WEATHER VINYL	78 55 98	78 55 98	1/4 ROLL

* WHEN USING 1/0 ALUMINUM TRIPLEX 1 ADDITIONAL 'H' TYPE COMPRESSION TAP (S.C.# 74 40 60) IS REQUIRED TO CONNECT SECOND (FEED THROUGH) HOT LEG.

NOTES:

1. **LEAVE SUFFICIENT SLACK ON CONDUCTORS AND FUSE HOLDER TO ALLOW REMOVAL FROM HANDHOLE FOR FUSE REPLACEMENT AND MAINTENANCE.**
2. INSERT #12 COPPER AND #8 COPPER IN SMALL GROOVE.
3. INSERT DOUBLE THICKNESS OF #8 COPPER IN SMALL GROOVE.
4. FOR SPLICING FEED THROUGH HOT LEG, REFER TO DRAWING CD310-4.
5. FOR PROPER TAPING PROCEDURE, REFER TO DRAWING CD215-12.

APPROVED	REVISIONS	MANITOBA HYDRO DISTRIBUTION STANDARDS
ORIGINAL DRAWING SEALED BY E.H. WIEBE 94-07-03		**STREET LIGHT CIRCUIT PROTECTED BY 30A FUSE IN STREET LIGHT STANDARD**

DRAWN	CHECKED	DATE		SHT	REV
W.B./CAD	W.C.	94-05	**CD 310-9**	0002 OF 2	00

1-04431-DA-56200-0004

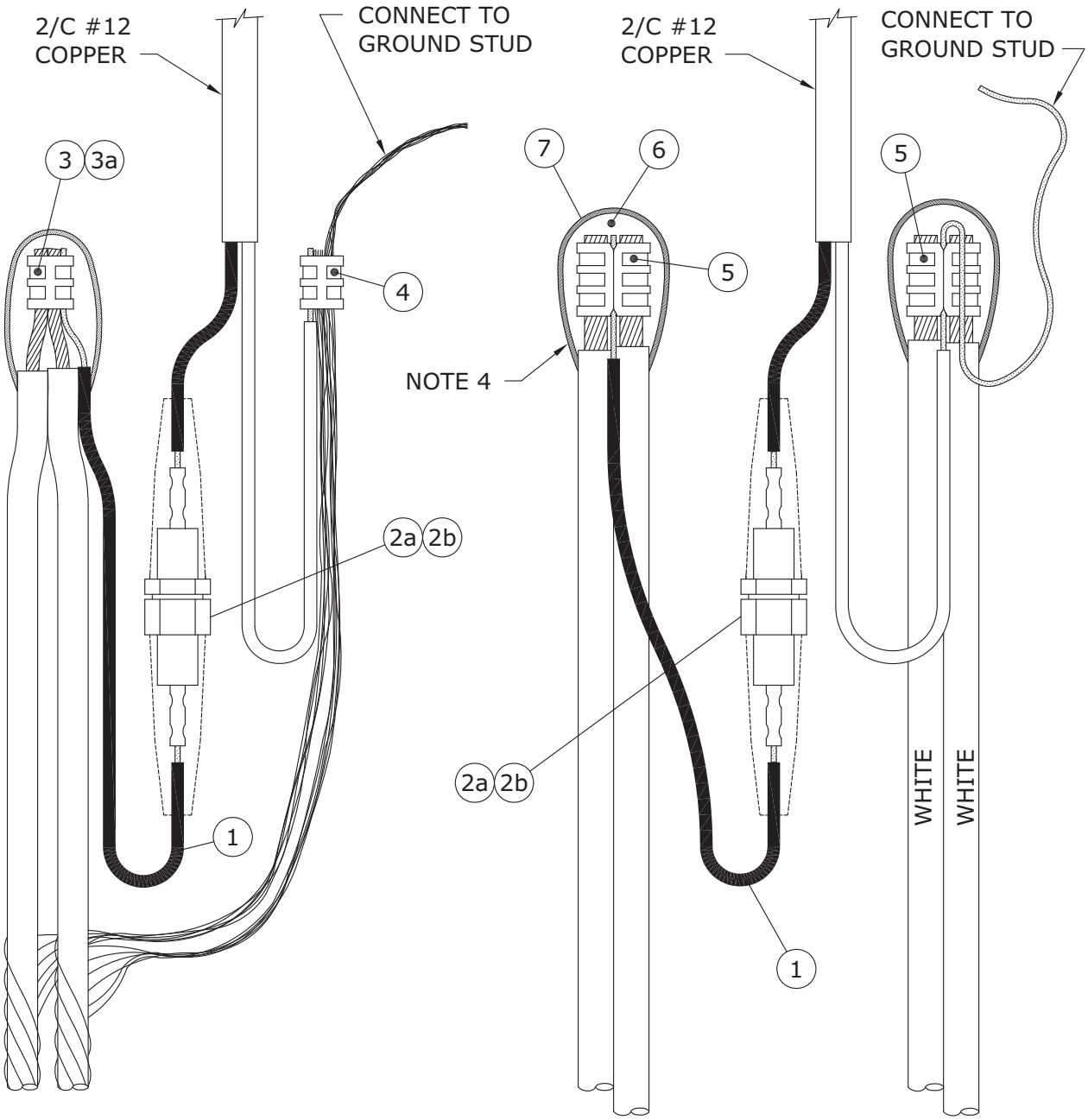

No. 4 ALUMINUM C/N CABLE

1/0 ALUMINUM TRIPLEX CABLE

NOTE:

RECOMMENDED FOR PROTECTING LUMINAIRES WHICH ARE TO BE MOUNTED ON STREET LIGHT POLES 16.8m AND HIGHER.

APPROVED	REVISIONS			MANITOBA HYDRO DISTRIBUTION STANDARDS
ORIGINAL DRAWING SEALED BY E.H. WIEBE 89-04-28				**INDIVIDUAL LUMINAIRE PROTECTED BY 15A FUSE IN STREET LIGHT STANDARD**
	95-01	2	NOTE ADDED	
	94-04	1	CONN. REVISED DUE TO INSUL. NEUTRAL	

DRAWN	CHECKED	DATE		SHT	REV
W.B./CAD	G.W.	88-07	**CD 310-10**	0001 OF 2	02

1-04431-DA-56200-0005

BILL OF MATERIAL

ITEM No.	DESCRIPTION	STORES CODE No.		QUANTITY
		FOR USE WITH # 4 AL. C/N	FOR USE WITH 1/0 AL. TRIPLEX	
1	2/C # 12 COPPER	93 52 12	93 52 12	1m
2a	FUSEHOLDER, 15/30A C/W BOOTS	31 91 30	31 91 30	1
2b	FUSE, STREET LIGHT, 15A	31 14 15	31 14 15	1
3	'C' TYPE AL. COMPRESSION TAP	74 41 30	---	1
3a	'H' TYPE AL. COMPRESSION TAP	74 40 10	---	1 *
4	'C' TYPE CU. COMPRESSION TAP	74 40 90	---	1
5	'H' TYPE AL. COMPRESSION TAP	---	74 40 60	3 **
6	TAPE, SELF-AMALGAMATING EPR	78 55 23	78 55 23	1/4 ROLL
7	TAPE, COLD WEATHER VINYL	78 55 98	78 55 98	1/4 ROLL

* FOR END OF CIRCUIT WHEN USING ONLY ONE CABLE.

** AT END OF CIRCUIT, QUANTITY MAY BE LESS THAN SHOWN.

NOTES:

1. **LEAVE SUFFICIENT SLACK ON CONDUCTORS AND FUSE HOLDER TO ALLOW REMOVAL FROM HANDHOLE FOR FUSE REPLACEMENT AND MAINTENANCE.**
2. FOR SPLICING FEED THROUGH HOT LEG, REFER TO DRAWING CD310-4.
3. FOR END OF CIRCUIT, REFER TO DRAWING CD310-4.
4. FOR PROPER TAPING PROCEDURE, REFER TO DRAWING CD215-12.

APPROVED	REVISIONS	MANITOBA HYDRO DISTRIBUTION STANDARDS
ORIGINAL DRAWING SEALED BY E.H. WIEBE 94-07-03		**INDIVIDUAL LUMINAIRE PROTECTED BY 15A FUSE IN STREET LIGHT STANDARD**

DRAWN	CHECKED	DATE		SHT	REV
W.B./CAD	W.C.	94-05	**CD 310-10**	0002 OF 2	00

1-04431-DA-56200-0005

SUPPLY VOLTAGES

THE SUPPLY VOLTAGE FOR STREET LIGHT CIRCUITS MAY BE PROVIDED BY POLE-MOUNTED DISTRIBUTION TRANSFORMERS OR BY PAD-MOUNTED DISTRIBUTION TRANSFORMERS.

THE MAJORITY OF ROADWAY LUMINAIRES ARE RATED FOR OPERATION ON EITHER 120 VOLT OR 240 VOLT CIRCUITS AND ARE FACTORY WIRED FOR 120 VOLT OPERATION EXCEPT FOR 400 WATT H.P.S. LUMINAIRES WHICH ARE RATED FOR 120/240 VOLT OPERATION BUT ARE FACTORY WIRED FOR 240 VOLT OPERATION.

IN CASES WHERE EXCESSIVE VOLTAGE DROP IN A STREET LIGHTING CIRCUIT IS A PROBLEM, A SUPPLY VOLTAGE OF 240/480 MAY BE USED. A SUPPLY VOLTAGE OF 240/480 CAN BE OBTAINED FROM TWO SINGLE PHASE POLE-MOUNTED DISTRIBUTION TRANSFORMERS CONNECTED AS SHOWN ON DRAWING CD315-2. IF A SINGLE PHASE PAD-MOUNTED DISTRIBUTION TRANSFORMER WITH A 240/480 VOLT SECONDARY IS REQUIRED, THE TRANSFORMER MUST BE ORDERED FROM THE MANUFACTURER (SEE DRAWING CD315-2).

CAUTION:
PRIOR TO CONNECTING LUMINAIRES TO A 240 VOLT SUPPLY CIRCUIT IT IS IMPORTANT TO CHECK THE INTERNAL CONNECTIONS TO THE TERMINAL BLOCK TO ENSURE THAT THE UNIT IS PROPERLY CONNECTED FOR 240 VOLT OPERATION.

APPROVED	REVISIONS	MANITOBA HYDRO DISTRIBUTION STANDARDS
ORIGINAL DRAWING SEALED BY E.H. WIEBE 89-04-28		**SUPPLY VOLTAGES FOR STREET LIGHT CIRCUITS**

DRAWN	CHECKED	DATE		SHT	REV
W.B./CAD	W.C.	88-08	**CD 315-1**	0001 OF 1	00

1-04431-DA-65620-0001

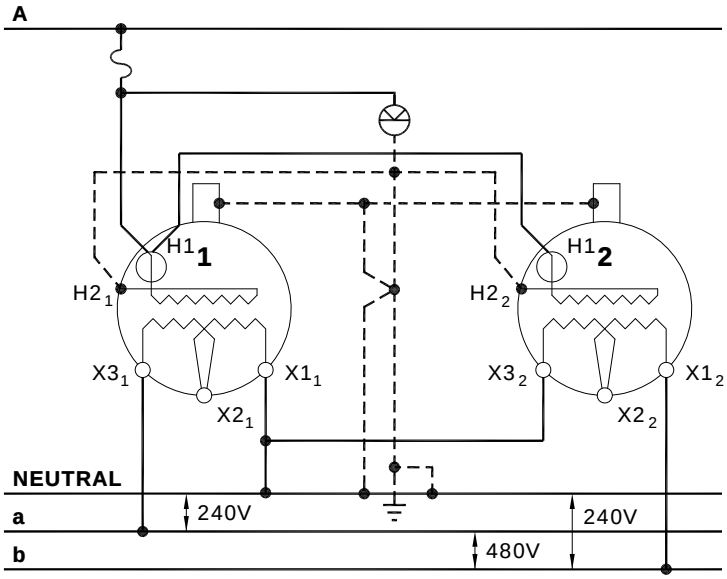

SECONDARY VOLTAGE 240/480V GROUNDED. TWO SINGLE-PHASE POLE-MOUNTED TRANSFORMERS WITH 120/240V SECONDARIES.

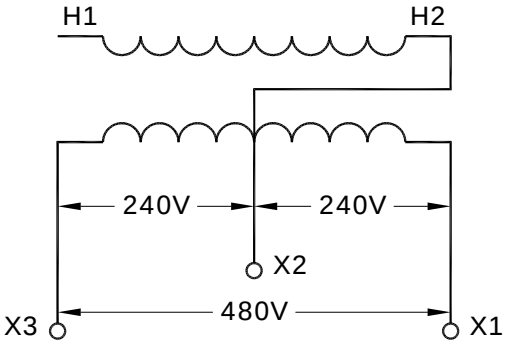

SECONDARY VOLTAGE 240/480V GROUNDED. SINGLE-PHASE PAD-MOUNTED TRANSFORMER AS SUPPLIED BY MANUFACTURER

SAFETY PRECAUTION

1. SINGLE PHASE PAD MOUNTED TRANSFORMERS WITH ABOVE SECONDARY VOLTAGES TO HAVE WARNING SIGN "**CAUTION - 240/480V SECONDARY - SEE NAMEPLATE**", STENCILLED ON THE OUTSIDE OF THE TRANSFORMER NEAR NAMEPLATE.
2. NAMEPLATES OF MODIFIED TRANSFORMERS TO BE REVISED.

PURCHASE OF 240/480 VOLT TRANSFORMER

1. INCLUDE ABOVE WARNING SIGN REQUIREMENT IN PURCHASE DESCRIPTION.

APPROVED	REVISIONS			MANITOBA HYDRO DISTRIBUTION STANDARDS
ORIGINAL DRAWING SEALED BY E.H. WIEBE 89-04-28				**240/480 VOLT SUPPLY FOR STREET LIGHT CIRCUITS**
	13-01	2	REVISED DIAGRAM	
	90-04	1	DROPOUT DELETED	

DRAWN	CHECKED	DATE		SHT	REV
W.B./CAD	L.D./D.O.	88-08	**CD 315-2**	0001 OF 1	02

1-04431-DA-65620-0002

CONTROL METHODS

1. LUMINAIRES CONTROLLED INDIVIDUALLY BY PHOTO-ELECTRIC CELL

THE PREFERRED METHOD FOR PROVIDING ON/OFF CONTROL OF A STREET LIGHT LUMINAIRE IS TO INSTALL A PHOTO-ELECTRIC CELL ON EACH LUMINAIRE, IF LUMINAIRES ARE MOUNTED ON HIGHER POLES (IN EXCESS OF 10.7 M OR 35 FT.) WHERE IT IS DIFFICULT TO REACH THE LUMINAIRE WITH THE LOCAL DISTRICT BUCKET TRUCK, CONSIDERATION SHOULD BE GIVEN TO USING A PHOTO-ELECTRIC CONTROLLED EXTERNALLY-MOUNTED RELAY SYSTEM.

2. PHOTO-ELECTRIC CONTROLLED EXTERNALLY-MOUNTED RELAY

SEVERAL LUMINAIRES CAN BE CONTROLLED SIMULTANEOUSLY BY INSTALLING A PHOTO-ELECTRIC CONTROLLED, EXTERNALLY MOUNTED RELAY, ON A WOOD POLE (SEE CD315-11) OR ON A STEEL STREET LIGHT POLE (SEE CD315-12). SINGLE POLE (SINGLE CIRCUIT) RELAYS ARE AVAILABLE WITH EITHER A 30 AMP OR A 60 AMP RATING. A BY-PASS SWITCH MAY BE INSTALLED TO PROVIDE A MEANS OF ACTIVATING THE STREET LIGHT CIRCUIT FOR DAYLIGHT MAINTENANCE PURPOSES.

3. STREET LIGHT RELAY USING STREET LIGHT CONTROL

ACTIVATING SUCCESSIVE SECTIONS OF STREET LIGHTING CIRCUITS BY MEANS OF A SERIES OF RELAYS (KNOWN AS A CASCADE CONTROLLED SYSTEM) IS NO LONGER USED AS A CONTROL METHOD. HOWEVER, SOME CASCADE CONTROLLED RELAY SYSTEMS REMAIN IN SERVICE. THE CONNECTION DIAGRAMS FOR A CASCADE CONTROLLED RELAY SYSTEM ARE SHOWN ON DRAWING CD315-14. DOUBLE POLE (DOUBLE CIRCUIT) RELAYS ARE NO LONGER PURCHASED, THEREFORE, DOUBLE POLE RELAYS WHICH FAIL MUST BE REPLACED WITH TWO SINGLE POLE RELAYS. BOTH THE SINGLE AND DOUBLE POLE OLDER STYLE RELAYS HAVE A 5 AMP FUSE PROTECTING THE RELAY COIL.

4. STREET LIGHT RELAY USING PILOT WIRE CONTROL

PILOT WIRE CONTROL SYSTEMS ARE NO LONGER USED FOR NEW CONSTRUCTION. HOWEVER, SOME PILOT WIRE CONTROL SYSTEMS REMAIN IN SERVICE. THE CONNECTION DIAGRAMS FOR PILOT WIRE CONTROL SYSTEMS ARE SHOWN ON DRAWING CD315-15. DOUBLE POLE (DOUBLE CIRCUIT) RELAYS ARE NO LONGER PURCHASED. THEREFORE, DOUBLE POLE RELAYS WHICH FAIL MUST BE REPLACED WITH TWO SINGLE POLE RELAYS.

5. PHOTO-ELECTRIC CONTROLLED RELAY IN BASE OF STANDARD

COMPACT RELAYS, MOUNTED IN THE BASE OF STEEL STREET LIGHT STANDARDS ARE NO LONGER USED FOR NEW CONSTRUCTION. THE COMPACT RELAY IS ACTIVATED VIA THE PHOTO-ELECTRIC CONTROLLER ON THE LUMINAIRE. IF A COMPACT RELAY FAILS AN EXTERNALLY-MOUNTED RELAY AND PHOTO-ELECTRIC CONTROLLER SHOULD BE INSTALLED (SEE CD315-12 AND CD315-13).

APPROVED	REVISIONS	MANITOBA HYDRO DISTRIBUTION STANDARDS			
ORIGINAL DRAWING SEALED BY E.H. WIEBE 89-04-28		**CONTROL METHODS FOR STREET LIGHT CONTROLS**			
DRAWN W.B./CAD	CHECKED W.C.	DATE 88-08	**CD 315-10**	SHT 0001 OF 1	REV 00

1-04431-DA-65620-0004

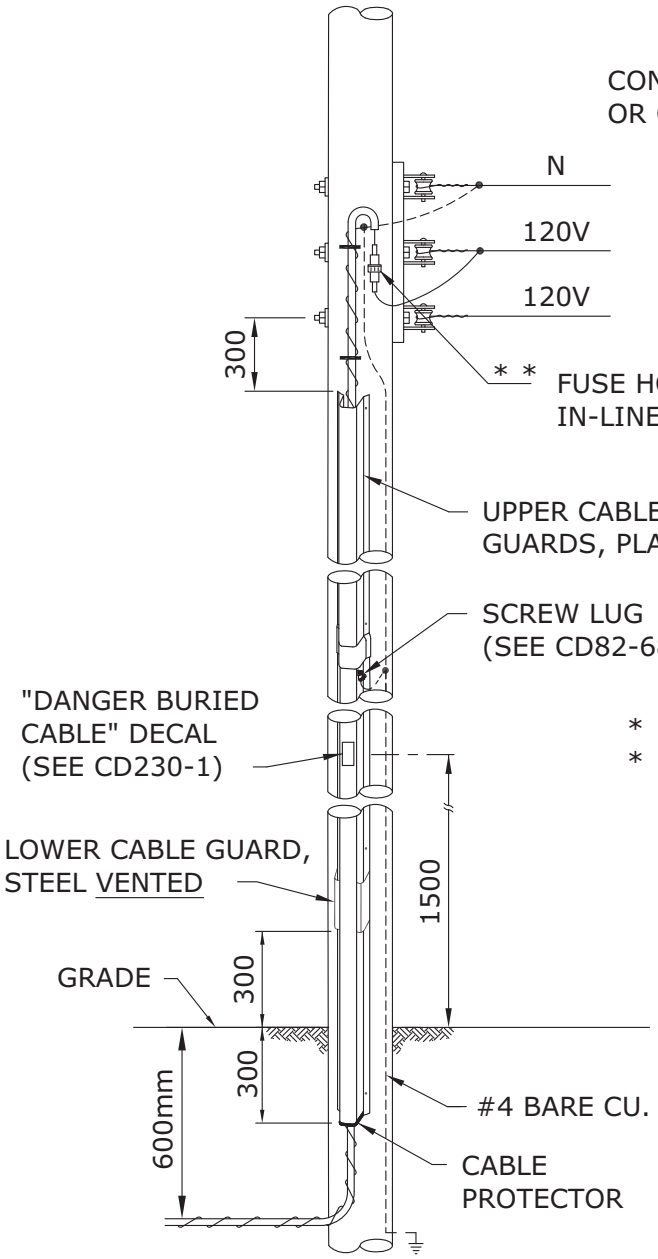

IN-LINE
FUSE PROTECTED

* * USED WHERE POLY ISN'T USED

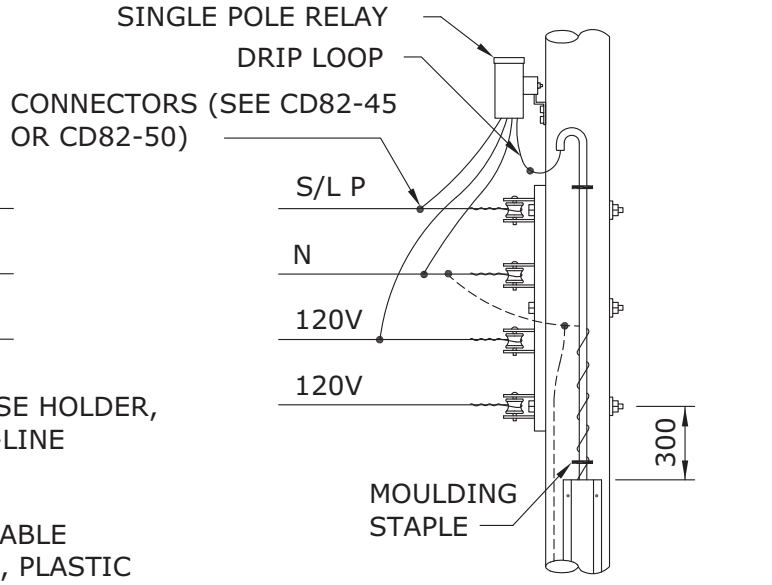

STREET LIGHT PILOT WIRE
CONTROLLED RELAY

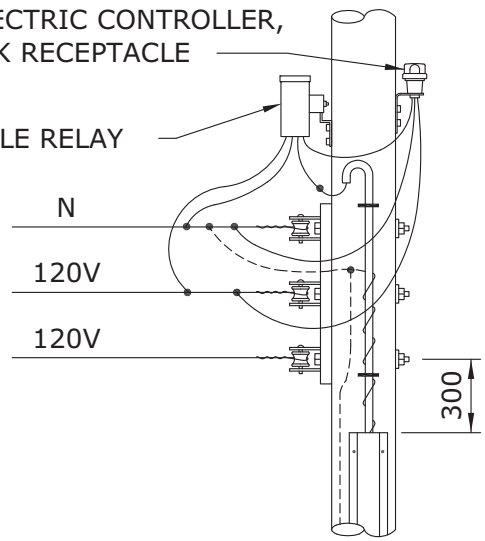

P.E. CELL
CONTROLLED RELAY

* USED WHERE ST./LT. PILOT
DOES NOT EXIST

NOTES:

1. REFER TO DRAWING CD200-63 FOR CABLE GUARD INSTALLATION DETAILS.
2. INSTALL A GROUND ROD AT THE LAST POLE ON THE STREET LIGHT CIRCUIT.
3. DIMENSIONS SHOWN ARE MILLIMETRES.

APPROVED	REVISIONS			MANITOBA HYDRO DISTRIBUTION STANDARDS
ORIGINAL DRAWING SEALED BY E.H. WIEBE 89-04-28	99-08	3	SHOW VENTED CABLE GUARD, SHEET 2 DELETED	**DIP POLE FOR UNDERGROUND STREET LIGHTING CIRCUIT**
	94-04	2	DWG. REFERENCE CHANGED	
	92-06	1	NOTE 1	

DRAWN	CHECKED	DATE		SHT	REV
R.L.B./CAD	K.C.H.	88-08	**CD 315-5**	0001 OF 1	03

1-04431-DA-65620-0003

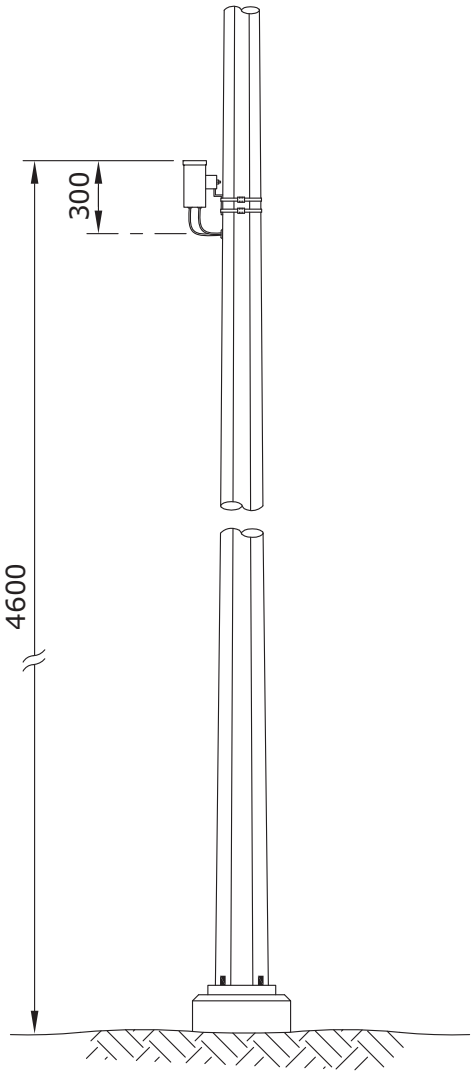

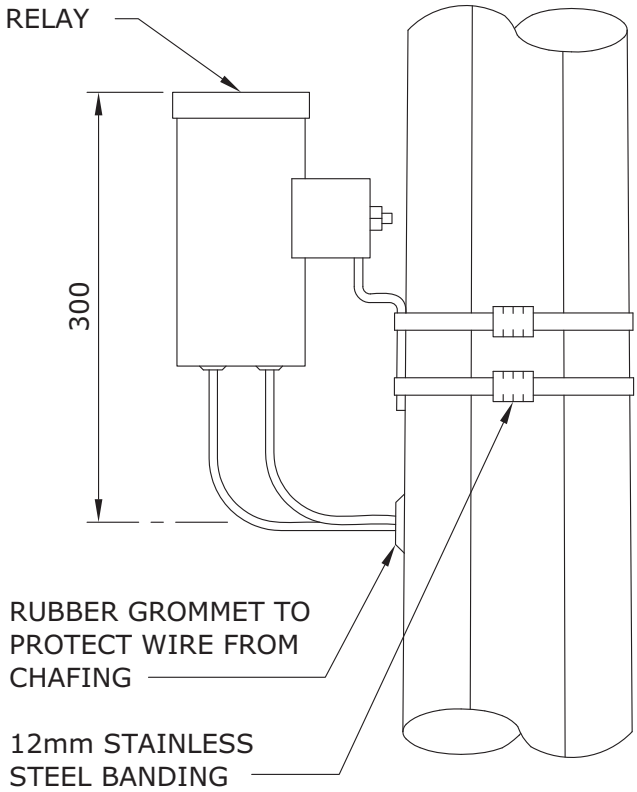

NOTES:

1. DRILL 25mm HOLE AT A POINT 4.3m ABOVE FINISHED GRADE.
2. INSTALL RUBBER GROMMET IN HOLE.
3. BAND RELAY TO POLE USING 12mm STAINLESS STEEL BANDING MATERIAL SO THAT THE TOP OF THE RELAY IS 300mm ABOVE THE CENTRE OF THE HOLE.
4. CONNECT RELAY LEADS TO 4.3m LENGTHS OF EQUAL SIZED CONDUCTOR AND PUSH SPLICES INSIDE POLE.
5. TAPE EXPOSED RELAY LEADS INTO A BUNDLE.
6. DIMENSIONS SHOWN ARE MILLIMETRES.

APPROVED	REVISIONS	MANITOBA HYDRO DISTRIBUTION STANDARDS
ORIGINAL DRAWING SEALED BY E.H. WIEBE 89-04-28		**INSTALLATION OF EXTERNALLY-MOUNTED RELAY**

DRAWN	CHECKED	DATE		SHT	REV
W.B./CAD	W.C.	88-09	**CD 315-12**	0001 OF 1	00

1-04431-DA-65620-0006

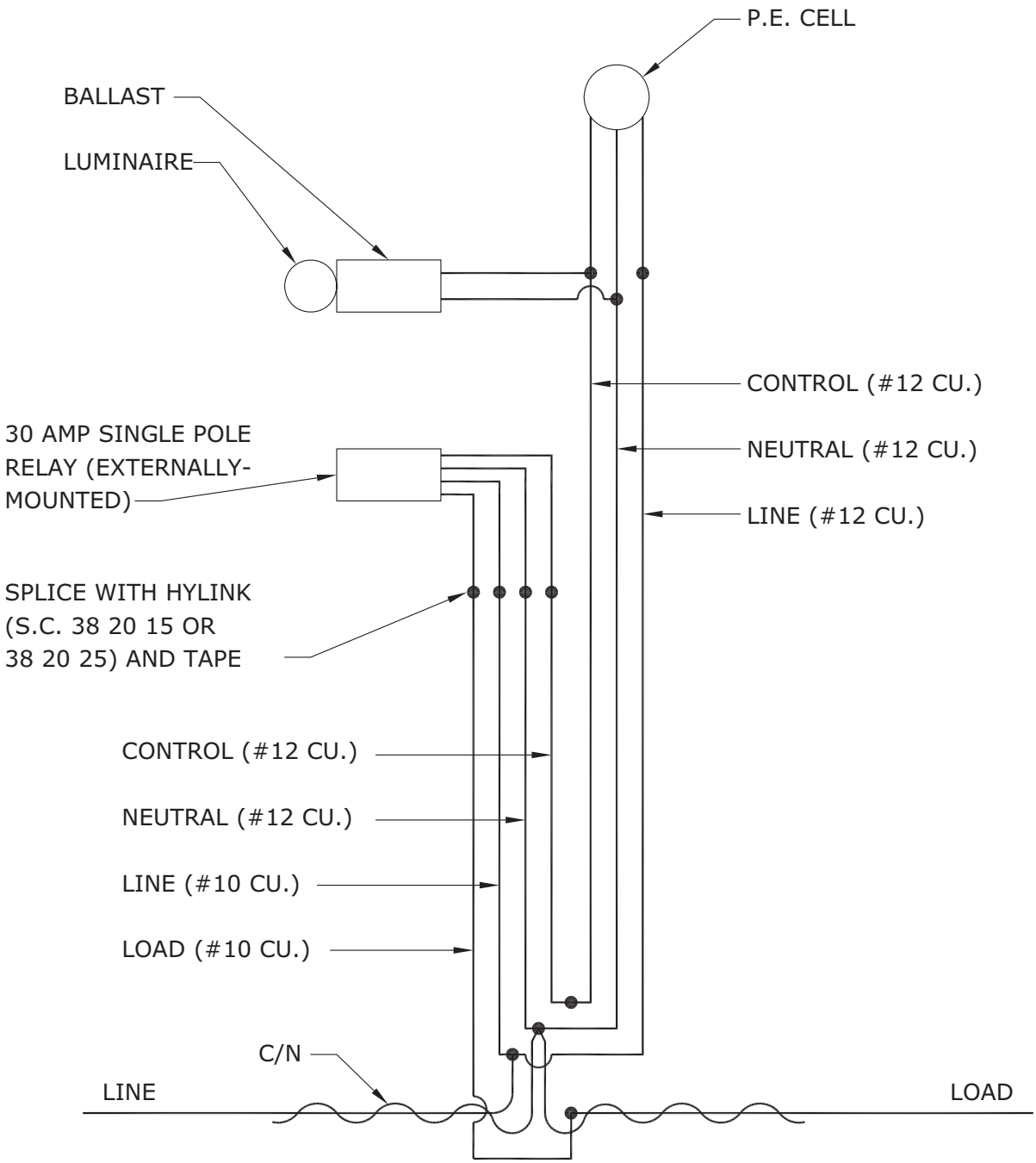

APPROVED	REVISIONS			MANITOBA HYDRO DISTRIBUTION STANDARDS		
ORIGINAL DRAWING SEALED BY E.H. WIEBE 89-04-28	94-03	1	MAXIMUM RELAY SIZE	**CONNECTION SCHEMATIC FOR EXTERNALLY-MOUNTED RELAY**		
DRAWN W.B./CAD	CHECKED W.C.	DATE 88-09		**CD 315-13**	SHT 0001 OF 1	REV 01

1-04431-DA-65620-0007

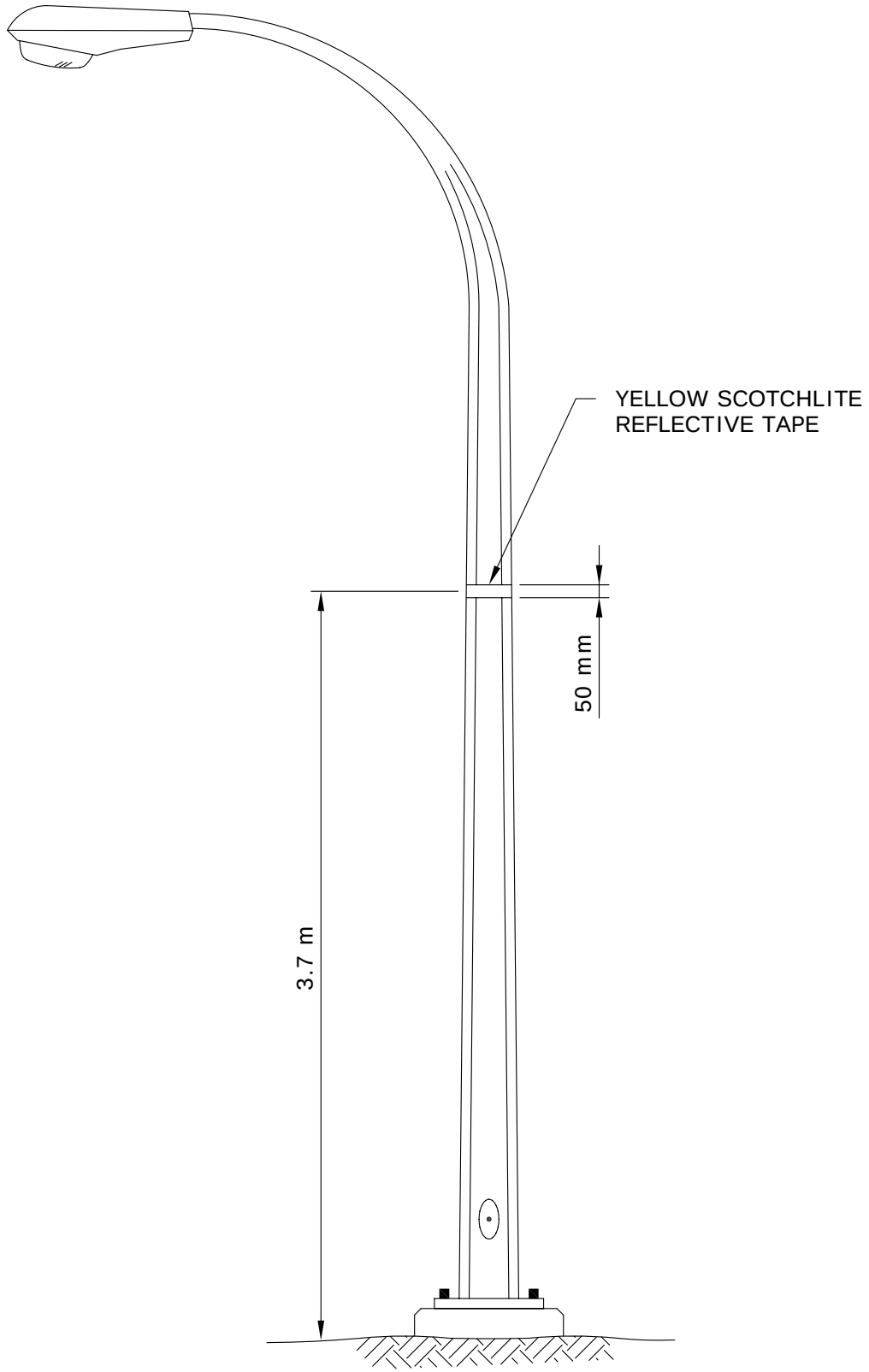

APPROVED	REVISIONS	MANITOBA HYDRO DISTRIBUTION STANDARDS
ORIGINAL DRAWING SEALED BY E.H. WIEBE 89-04-28		**IDENTIFICATION OF FIRST STREET LIGHT STANDARD CONNECTION TO CIRCUIT**

DRAWN	CHECKED	DATE		SHT	REV
W.B./CAD	W.C.	88-09	**CD 315-35**	0001 OF 1	00

1-04431-DA-65620-0014