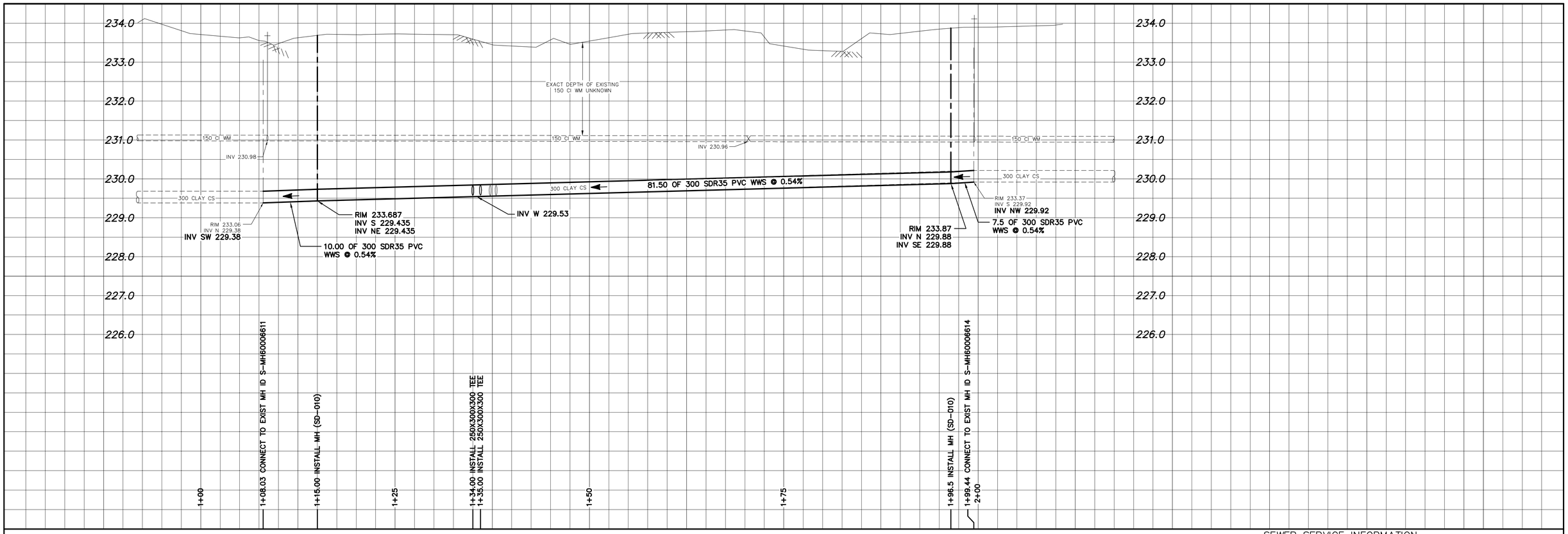

NOTE: CHAINAGES SHOWN ARE ALONG W SIDE OF BOREBANK ST

BOREBANK STREET

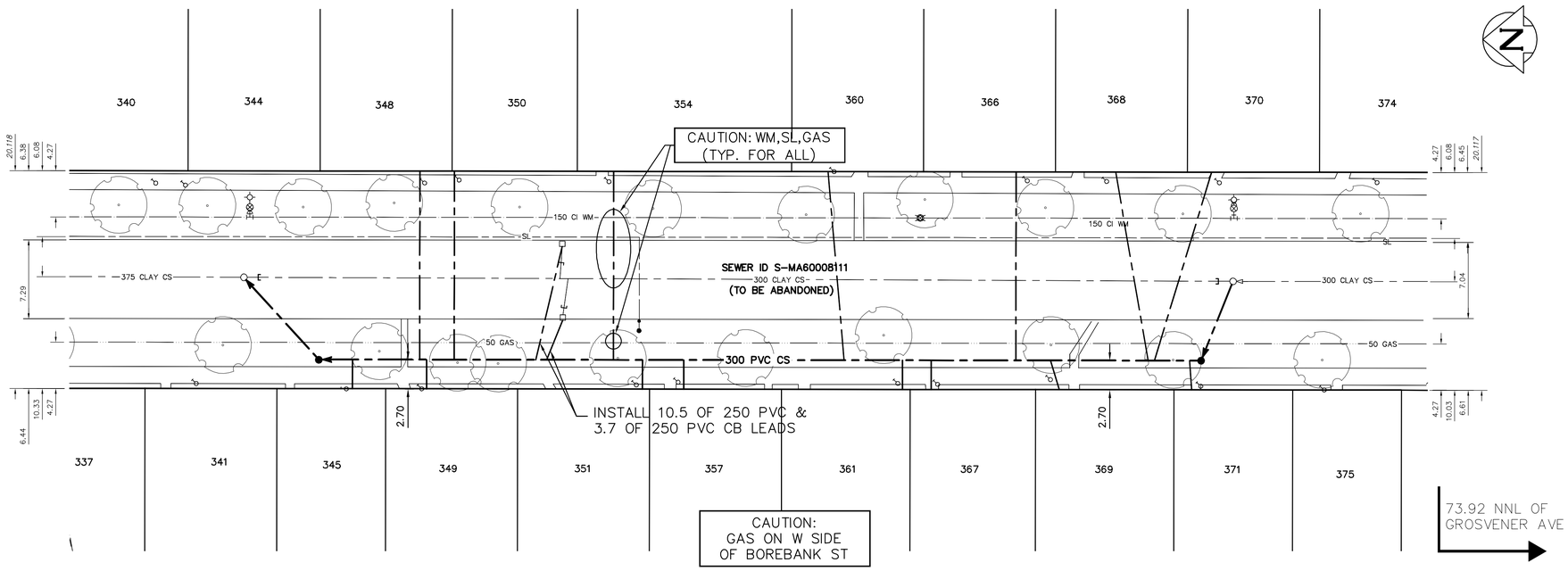

SEWER SERVICE INFORMATION

ADDRESS	SIZE (mm) MATERIAL	℄ DIST JUNCTION TIE	REMARKS
337 BOREBANK ST	150	2.5 S OF NL	OUTSIDE LIMITS
RESIDENTIAL	VC	21.13 N OF 2ND MH N GROSVENOR	–
340 BOREBANK ST	150	2.9 N OF SL	OUTSIDE LIMITS
RESIDENTIAL	–	7.39 N OF 2ND MH N OF GROSVENOR	–
341 BOREBANK ST	150	5.5 S OF NL	OUTSIDE LIMITS
RESIDENTIAL	–	4.06 N OF 2ND MH N OF GROSVENOR	–
344 BOREBANK ST	150	0.3 S OF NL	OUTSIDE LIMITS
RESIDENTIAL	–	7.39 N OF 2ND MH N OF GROSVENOR	–
345 BOREBANK ST	150	3.2 N OF SL	**RENEW TO ℄**
COMMERCIAL	–	83.33 N OF 1ST MH N OF GROSVENOR	–
348 BOREBANK ST	150	1.7 S OF NL	WYED WITH # 350
RESIDENTIAL	–	73.63 N OF 1ST MH N OF GROSVENOR	**RENEW TO ℄**
349 BOREBANK ST	150	4.2 S OF NL	**RENEW TO ℄**
RESIDENTIAL	–	75.34 N OF 1ST MH N OF GROSVENOR	–
350 BOREBANK ST	150	2.9 N OF SL	WYED WIT # 348
RESIDENTIAL	–	73.63 N OF 1ST MH N OF GROSVENOR	**RENEW TO ℄**
351 BOREBANK ST	150	3.2 S OF NL	WYED WITH # 357
COMMERCIAL	–	53.55 N OF 1ST MH N OF GROSVENOR	**RENEW TO ℄**
354 BOREBANK ST	150	2.8 S OF NL	**RENEW TO ℄**
RESIDENTIAL	–	61.14 N OF 1ST MH N OF GROSVENOR	–
357 BOREBANK ST	150	1.2 N OF SL	WYED WITH # 351
RESIDENTIAL	–	53.55 N OF 1ST MH N OF GROSVENOR	**RENEW TO ℄**
360 BOREBANK ST	150	4.2 S OF NL	**RENEW TO ℄**
RESIDENTIAL	–	35.45 N OF 1ST MH N OF GROSVENOR	–
361 BOREBANK ST	150	0.9 S OF NL	**RENEW TO ℄**
COMMERCIAL	–	29.31 N OF 1ST MH N OF GROSVENOR	–
366 BOREBANK ST	150	4.0 N OF SL	**RENEW TO ℄**
RESIDENTIAL	–	20.61 N OF 1ST MH N OF GROSVENOR	–
368 BOREBANK ST	150	5.0 S OF NL	**RENEW TO ℄**
RESIDENTIAL	–	12.87 N OF 1ST MH N OF GROSVENOR	–
369 BOREBANK ST	150	1.3 S OF NL	**RENEW TO ℄**
RESIDENTIAL	–	18.28 N OF 1ST MH N OF GROSVENOR	–
370 BOREBANK ST	150	3.4 S OF NL	**RENEW TO ℄**
COMMERCIAL	–	5.09 N OF 1ST MH N OF GROSVENOR	–
371 BOREBANK ST	150	2.9 S OF NL	**RENEW TO ℄**
RESIDENTIAL	–	5.81 N OF 1ST MH N OF GROSVENOR	–
375 BOREBANK ST	150	2.5 S OF NL	OUTSIDE LIMITS
RESIDENTIAL	–	5.74 E OF 1ST MH OF GROSVENOR	–

SEWER JUNCTION INFORMATION FROM SEWER VIDEO INSPECTION
SEWER ID S-MA600081111
DISTANCE FROM MH ID S-MH60006614

DISTANCE	DIAMETER	CLOCK
2.9	150	2
5.3	150	2
6.1	150	10
13.1	150	2
18.6	150	10
20.8	150	2
29.5	150	10
35.7	150	2
47.5	150	2
48.3	150	10
53.6	150	10
61.5	150	2
63.2	150	11
63.9	150	1
67.5	150	10
73.9	150	2
75.6	150	10
83.3	150	10

METRIC
WHOLE NUMBERS INDICATE MILLIMETRES
DECIMALIZED NUMBERS INDICATE METRES

0.0 5.0 10.0 15.0 20.0 25.0

WARNING

IF POWER EQUIPMENT OR EXPLOSIVES ARE TO BE USED FOR EXCAVATION ON THIS PROJECT THE CONTRACTOR MUST:

1) NOTIFY THE GAS COMPANY OF THE PROPOSED LOCATION OF EXCAVATION.

2) TAKE PRECAUTION TO AVOID DAMAGE TO GAS COMPANY INSTALLATIONS.

SEE PROVINCIAL REGULATION 210/72 FOR DETAILS

LOCATION APPROVED
UNDERGROUND STRUCTURES

SUPV. U/G STRUCTURES COMMITTEE — DATE

NOTE:

LOCATION OF UNDERGROUND STRUCTURES AS SHOWN ARE BASED ON THE BEST INFORMATION AVAILABLE BUT NO GUARANTEE IS GIVEN THAT ALL EXISTING UTILITIES ARE SHOWN OR THAT THE GIVEN LOCATIONS ARE EXACT. CONFIRMATION OF EXISTENCE AND EXACT LOCATION OF ALL SERVICES MUST BE OBTAINED FROM THE INDIVIDUAL UTILITIES BEFORE PROCEEDING WITH CONSTRUCTION.

B.M.
ELEV.

NO.	REVISIONS	DATE	BY

DESIGNED BY	TS	CHECKED BY	SC
DRAWN BY	RS	APPROVED BY	KZ
SCALE: HORIZONTAL	1:250	RELEASED FOR CONSTRUCTION	
VERTICAL	1:50		
DATE	2015 01 08	DATE	

PLOT DATE: 2015 01 08

ENGINEER'S SEAL

ORIGINAL SIGNED BY
S.J.R.
COURNOYER
15/01/08

CONSULTANT DRAWING NUMBER
–

BID OPPORTUNITY: 1173-2014
CONTRACT NUMBER: 17

Winnipeg

THE CITY OF WINNIPEG

WATER AND WASTE DEPARTMENT
ENGINEERING DIVISION

2014 SEWER RENEWALS
AND REPAIRS

BOREBANK STREET

1ST MH N OF GROSVENOR AVENUE TO
2ND MH N OF GROSVENOR AVENUE

SHEET 2 OF 5

CITY DRAWING NUMBER
10973

FILE PATH: R:\DRAWINGS\SEWER\2014 RENEWALS\FULL SEGMENT RENEWALS\CONTRACT 17 (CONTRACT 6)\
FILE NAME: 10973.dwg