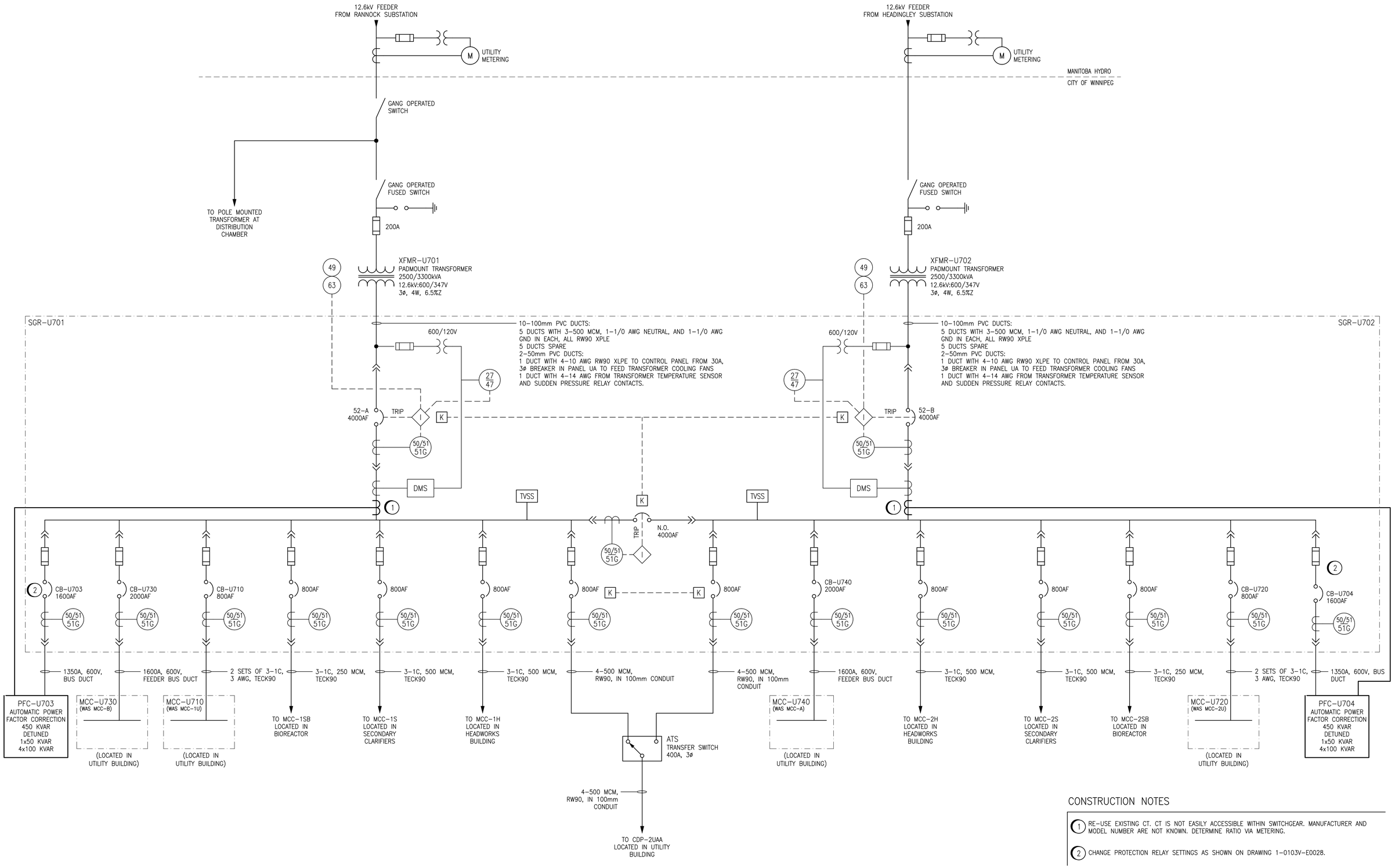

CONSTRUCTION NOTES

1. RE–USE EXISTING CT. CT IS NOT EASILY ACCESSIBLE WITHIN SWITCHGEAR. MANUFACTURER AND MODEL NUMBER ARE NOT KNOWN. DETERMINE RATIO VIA METERING.
2. CHANGE PROTECTION RELAY SETTINGS AS SHOWN ON DRAWING 1–0103V–E0028.

NOTES:

1. THIS DRAWING IS BASED ON 1–0103A–E0003–002. ACTUAL CONFIGURATION MAY NOT BE EXACTLY AS SHOWN.

DRAWING NUMBER	REFERENCE DRAWINGS
1–0103V–E0028	SGR–U701 AND SGR–U702 PROTECTION SETTINGS

APEGM Certificate of Authorization
SNC-Lavalin Inc.
No. 4489

NO.	REVISIONS	DATE	DESIGN	CHECK
00	ISSUED FOR TENDER (BID OP. 419–2013)	2013/06/26	TMC	CJR

SNC·LAVALIN

SNC–LAVALIN INC.
148 Nature Park Way
Winnipeg, MB, Canada R3P 0X7
204–786–8080

DESIGNED BY: T. CHURCH	CHECKED BY: C. REIMER
DRAWN BY: S. FUNK	APPROVED BY: C. REIMER
SCALE: NTS	RELEASED FOR CONSTRUCTION BY: M. PAETKAU
DATE: 2013/01/08	DATE: 2013/06/26
CONSULTANT NO.:	

ENGINEER'S SEAL
PROVINCE OF MANITOBA
T.M. CHURCH
Member
32682
REGISTERED PROFESSIONAL ENGINEER
Jun. 26 2013
Rev. 00

Winnipeg
THE CITY OF WINNIPEG
WATER AND WASTE DEPARTMENT

WEST END WATER POLLUTION CONTROL CENTRE
POWER FACTOR CORRECTION
SINGLE LINE DIAGRAM
SWITCHGEAR SGR–U701 AND SGR–U702

CITY DRAWING NUMBER	SHEET	REV.	SIZE
1–0103V–E0027	001	00	A1

1–0103V–E0027–001–00.dwg

A1 SIZE – 594mm x 841mm

LAST SAVE: 2013/06/26 – 3:49pm
PATH: M:\612441\4ENG\47ELE\DD – General DWG\1–0103V–E0027–001–00.dwg