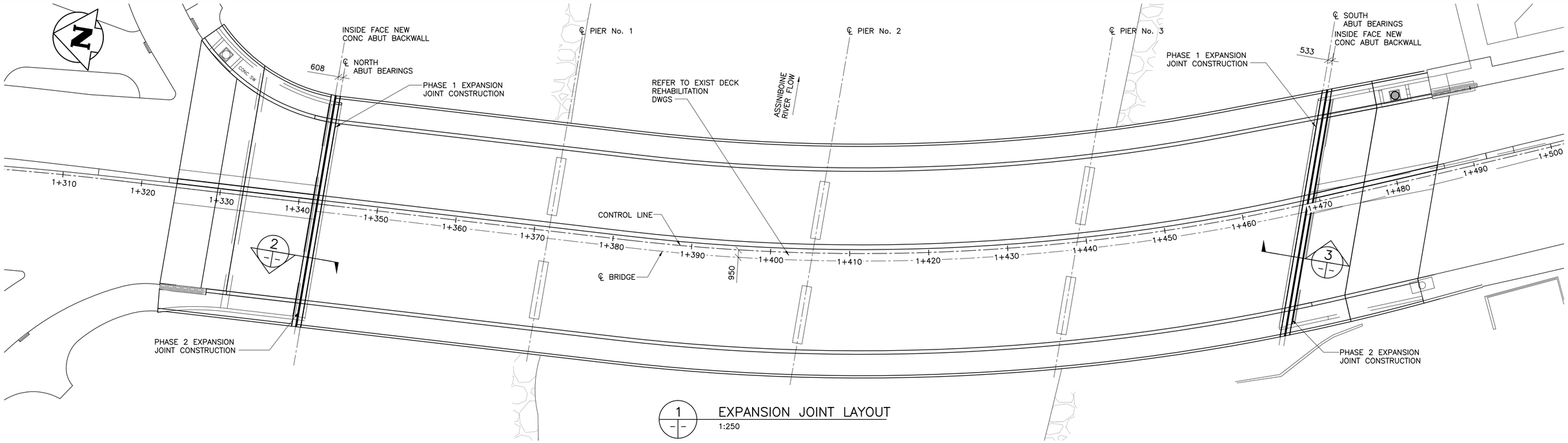

1 EXPANSION JOINT LAYOUT
1:250

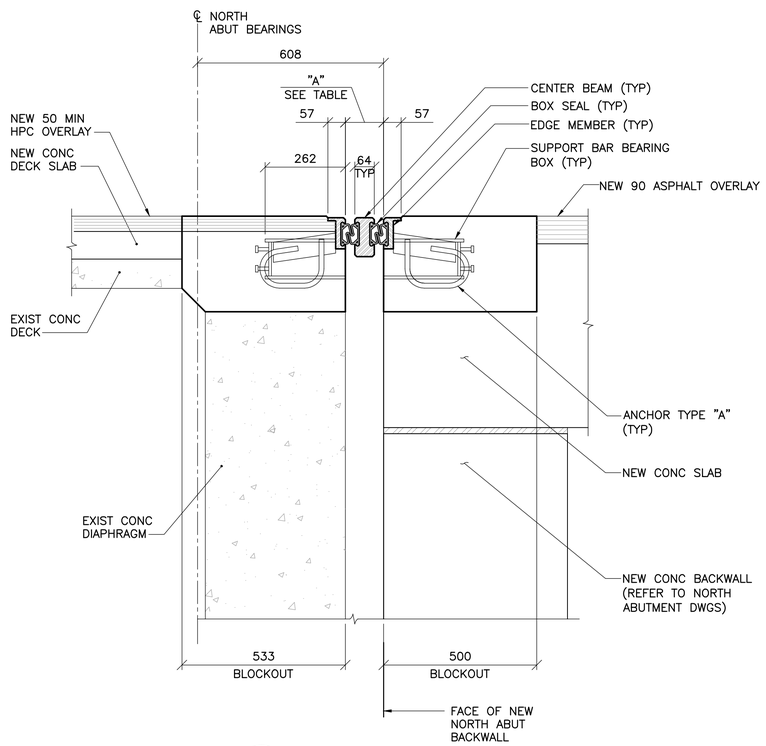

2 SECTION
1 : 10
– WABO MODULAR D600 AT NORTH ABUTMENT

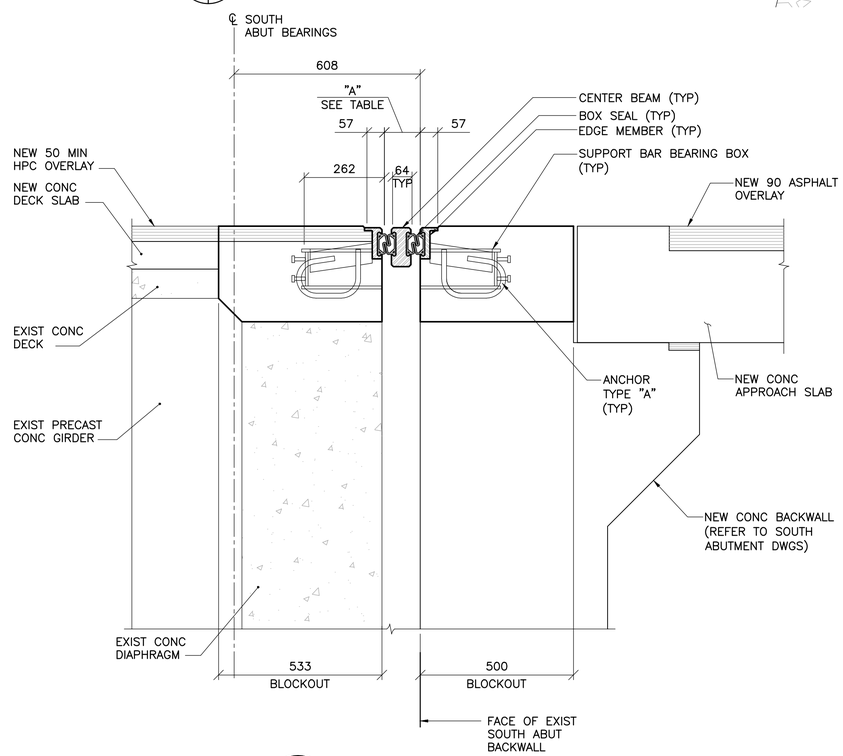

3 SECTION
1 : 10
– WABO MODULAR D600 AT SOUTH ABUTMENT

GENERAL NOTES:

EXPANSION JOINTS

1. THE EXPANSION JOINT ASSEMBLIES SHALL BE DESIGNED TO CARRY CHBDC S6–06 CL–625 TRUCK LOAD.
2. EXPANSION JOINTS FOR DECK SLAB CONCRETE SHALL BE WABO MODULAR D–600 JOINTS. EXPANSION JOINTS FOR SIDEWALK SLAB CONCRTE SHALL BE SE–300 STRIP SEAL SYSTEM.
3. STEEL SHALL BE IN ACCORDANCE WITH THE LATEST CSA STANDARD CAN/CSA G40.21M GRADE 300W OR EQUAL AND ALL SUBSEQUENT REVISIONS.
4. STEEL EXTRUSIONS SHALL BE IN ACCORDANCE WITH THE LATEST CSA STANDARD CAN/CSA G40.21M GRADE 230G MINIMUM AND ALL SUBSEQUENT REVISIONS.
5. ALL STEEL COMPONENTS SURFACES, INCLUDING COVER PLATES AND TRENCH SHALL BE HOT DIP GALVANIZED IN ACCORDANCE WITH THE LATEST CSA STANDARD CAN/CSA G164–M92 AND ALL SUBSEQUENT REVISIONS TO A MINIMUM NET RETENTION OF 610g/m² AFTER FABRICATION.
6. JOINT ASSEMBLY SHALL BE FABRICATED AND COMPLETELY SHOP ASSEMBLED AND PRESET TO DIMENSION "A" FOR 20°C PRIOR TO SHIPMENT.
7. EXPANSION JOINT UNITS AND RELATED MATERIALS SHALL BE INSTALLED IN ACCORDANCE WITH MANUFACTURER'S RECOMMENDATIONS.
8. THE CONTRACTOR IS REQUIRED TO PROVIDE SUPPORT FOR THE EXPANSION JOINT BOXES ASSEMBLIES DURING PLACEMENT OF CONCRETE. ALL SUPPORT SYSTEMS SHALL NOT INTERFERE WITH ANY CONCRETE FINISHING OPERATIONS.
9. BLEEDER HOLES SHALL BE DRILLED INTO THE TOP OF THE STEEL EDGE BEAMS OF THE EXPANSION JOINT AND INTO THE TOP OF THE BARRIER COVER PLATES WHERE CONCRETE IS TO BE CAST DIRECTLY AGAINST. FOLLOWING CONCRETING OPERATIONS THE ENGINEER SHALL INSPECT THESE AREAS BY METHOD OF SOUNDING. ALL VOIDS SHALL BE FILLED WITH AN APPROVED NON–SHRINK GROUT.
10. ROADWAY AND SIDEWALK EXPANSION JOINTS SHALL BE INSTALLED IN THREE PIECES ACCORDING TO CONSTRUCTION STAGING. REFER TO THE MANUFACTURER'S PROCEDURE FOR INSTALLATION.
11. SEAL SHALL BE PREFORMED NEOPRENE RUBBER AS SPECIFIED. EACH SEAL SHALL BE SUPPLIED & INSTALLED IN ONE CONTINUOUS PIECE. NO SPLICE IN THE RUBBER SEAL WILL BE PERMITTED.
12. ROADWAY/SIDEWALK EXPANSION JOINT ASSEMBLY SHALL BE INSTALLED 5mm BELOW ELEVATION AND GRADE OF ADJACENT BRIDGE DECK/SIDEWALK.
13. ALL BARRIER COVER PLATES SHALL BE RECESSED 13mm FROM THE FACE OF THE CONCRETE.
14. UNLESS NOTED ROADWAY, SIDEWALK, BARRIER AND CURB DIMENSIONS SHOWN ARE TO CONCRETE FACES. EXPANSION JOINT FABRICATOR SHALL MAKE APPROPRIATE ADJUSTMENTS FOR CHAMFERS AND OFFSETS AS SHOWN ON DETAILS.
15. INSTALLATION TEMPERATURE SHALL BE TAKEN AS THE MEAN SHADE AIR TEMPERATURE 48 HOURS PRIOR TO JOINT INSTALLATION.
16. ALL AREAS OF DAMAGED GALVANIZING SHALL BE REPAIRED BY USING THE GALVALLOY PROCEDURE AS SPECIFIED.
17. PRIOR TO PLACING REINFORCING BARS OR CONCRETE, THE INSTALLATION SHALL BE APPROVED BY THE CONTRACT ADMINISTRATOR.
18. IMMEDIATELY PRIOR TO PLACEMENT OF CONCRETE, ALL METAL SURFACES WHICH WILL BE IN CONTACT WITH CONCRETE SHALL BE COATED WITH EPOXY ADHESIVE. RATE OF PLACEMENT OF ADHESIVE SHALL BE SUCH THAT THE ADHESIVE DOES NOT DRY OR SET BEFORE CONCRETE IS PLACED AGAINST IT.
19. LOOSEN ERECTION BOLTS WITHIN 24 HOURS OF CONCRETING TO ALLOW JOINT MOVEMENT DUE TO TEMPERATURE CHANGE.
20. AFTER REMOVAL OF CLAMPING CHANNELS AND SPACER DAM, BOLT AND BLEEDER HOLES TO BE FILLED WITH AN APPROVED EPOXY GROUT.
21. SEAL WELDING OF THE TOP EDGE COVER PLATE MEMBERS TO THE EXPANSION JOINT END PLATES AND ASSOCIATED FIELD GALVANIZING SHALL TAKE PLACE PRIOR TO INSTALLATION OF EXPANSION JOINT SEALS.
22. ALL SURFACES IN CONTACT WITH JOINT SEALS SHALL BE CLEANED PRIOR TO INSTALLATION OF SEALS.

TEMPERATURE WIDTH ADJUSTMENT TABLE

TEMP.	40°C	35°C	30°C	25°C	20°C	15°C	10°C	5°C	0°C	–5°C	–10°C	–15°C	–20°C	–25°C	–30°C	–35°C	–40°C
"A"	109	113	117	121	125	129	133	137	141	145	149	153	157	161	165	169	173

FOR BOTH NORTH & SOUTH ABUTMENT EXPANSION JOINTS WABO MODULAR D600 UNITS ON ROADWAY

TEMPERATURE WIDTH ADJUSTMENT TABLE

TEMP.	40°C	35°C	30°C	25°C	20°C	15°C	10°C	5°C	0°C	–5°C	–10°C	–15°C	–20°C	–25°C	–30°C	–35°C	–40°C
"J"	58	62	66	70	74	78	82	86	90	94	98	102	106	110	114	118	122

FOR BOTH NORTH & SOUTH ABUTMENT EXPANSION JOINTS STRIPSEAL TYPE M SE–500 UNITS ON SIDEWALKS

APEGM
Certificate of Authorization
Wardrop Engineering Inc.
No. 195 Date: April 30, 2011

B.M. ELEV.	F.B.		
00	ISSUED FOR TENDER	11.02.18	VB
NO.	REVISIONS	DATE	BY

WARDROP
A TETRA TECH COMPANY

DESIGNED BY	K.Y.	CHECKED BY	V.B.
DRAWN BY	E.M.M.	APPROVED BY	R.H.W.
HOR. SCALE: / VERTICAL:	AS NOTED	RELEASED FOR CONSTRUCTION	DATE
		ORIGINAL SIGNED	11.02.16
DATE	10.12.03	MATT CHISLETT, P.ENG BRIDGE PROJECTS ENGINEER	

PROVINCE OF MANITOBA
ORIGINAL SIGNED 11.02.16
V. BANTHIA
Member 23477
REGISTERED PROFESSIONAL ENGINEER

CONSULTANT DRAWING NO.
0900070502–DWG–S0092

Winnipeg

THE CITY OF WINNIPEG
PUBLIC WORKS DEPARTMENT
TRANSPORTATION ENGINEERING DIVISION

OSBORNE STREET BRIDGE
REHABILITATION & RELATED WORKS

CITY DRAWING NUMBER B109–11–097
SHEET 92 OF 131

EXPANSION JOINT
LAYOUT AND SECTIONS

92