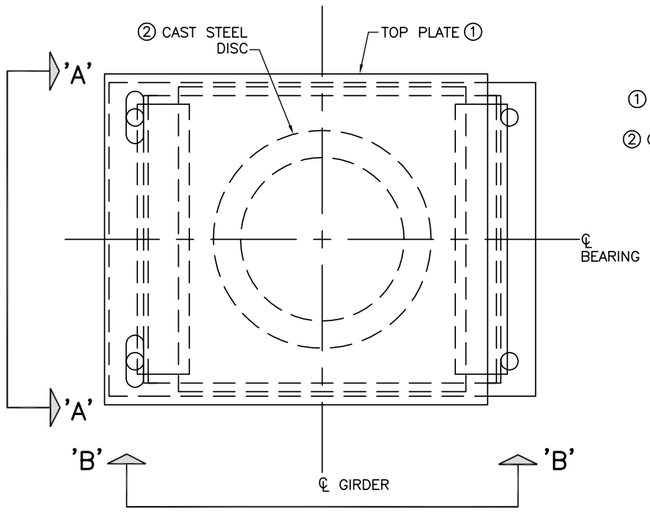


2 DETAIL 2 3 1:8

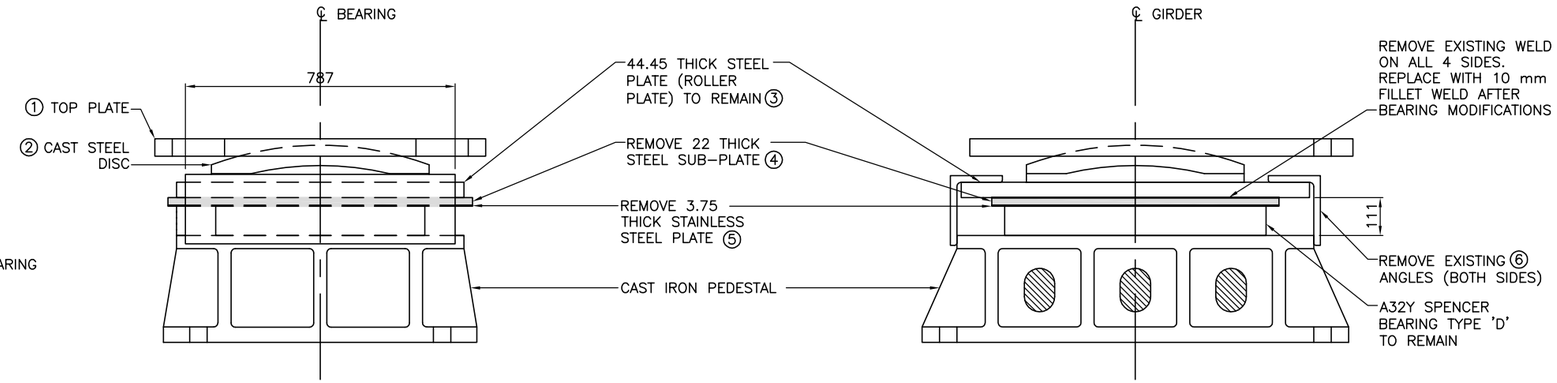


VIEW 'A'–'A'

EXISTING BEARING
1:8

VIEW 'B'–'B'

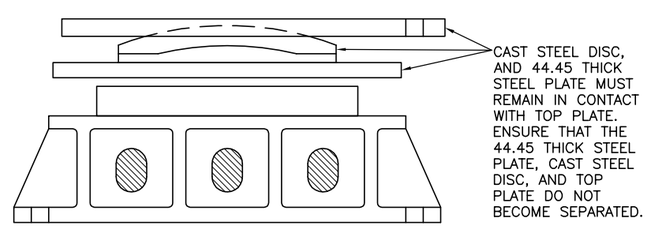


BEARING ASSEMBLY WITH PLATES REMOVED
1:8

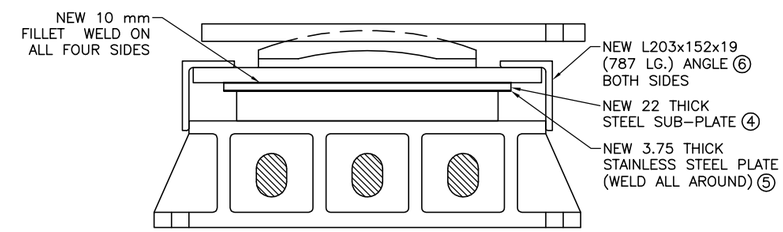


REFURBISHED BEARING
1:8

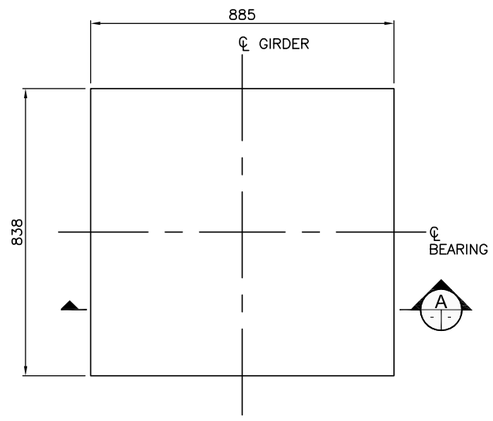


PLAN OF PLATE ASSEMBLY
1:8

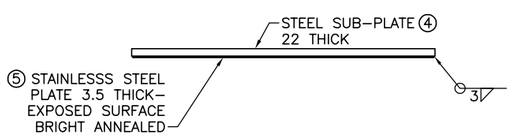


A SECTION 1:8

## DESIGN DATA:

1. STAINLESS STEEL PLATE SHALL CONFORM TO ASTM A240–00 AND SHALL HAVE A MINIMUM THICKNESS OF 3.5 mm. THE ROUGHNESS OF THE CONTACT SURFACE, MEASURED IN ACCORDANCE WITH CSA B95, SHALL NOT BE GREATER THAN 0.25 μm ARITHMETIC AVERAGE FOR PLANE SURFACES AND 0.50 μm ARITHMETIC AVERAGE FOR CURVED SURFACES.
2. ANGLES AND SUB–PLATE SHALL CONFORM TO CSA G40.21 GRADE 300W AND SHALL BE METALLIZED.
3. ALL WELDING TO BE IN ACCORDANCE WITH CAN/CSA W59–03.

## NOTES–TYPICAL BEARING REFURBISHMENT:

(2 REQUIRED)

1. REMOVE EXISTING WELDS CONNECTING ③ & ④.
2. REMOVE BOTH EXISITING ANGLES ⑥.
3. JACK BRIDGE. MAXIMUM 6mm.
4. REMOVE EXISTING ④ AND ⑤.
5. INSTALL NEW ④ AND ⑤.
6. LOWER BRIDGE
7. WELD PLATE ASSEMBLY ALL AROUND
8. INSTALL 2 NEW ANGLES ⑥.
9. REMOVE ALL RUST AND LOOSE GALVANIZING BY GRIT BLASTING.
10. METALLIZE REFURBISHED BEARINGS.

## LEGEND

| | |
|---|---|
| ① | TOP PLATE |
| ② | CAST STEEL DISC |
| ③ | 44.45 THICK STEEL PLATE |
| ④ | 22 THICK STEEL SUB–PLATE (EXISTING/NEW) |
| ⑤ | 3.5 THICK STAINLESS STEEL PLATE (EXISTING/NEW) |
| ⑥ | L203x152x19 (787 LG.) |

APEGM Certificate of Authorization
Dillon Consulting Limited (MB)
No. 1789 Date: MAY 31, 2011

DRAWING REDUCED NOT TO SCALE

B.M. ELEV.

| NO. | REVISIONS | DATE | BY |
|---|---|---|---|
| 1 | ISSUED FOR TENDER | 6/1/11 | JGW |
| 0 | ISSUED FOR REVIEW | 5/11/11 | JGW |

DESIGNED BY GCL
DRAWN BY JGW
CHECKED BY SSR
APPROVED BY –
HOR. SCALE AS NOTED
VERTICAL AS NOTED
DATE MAY 2011

DILLON CONSULTING
RELEASED FOR CONSTRUCTION
DATE

ENGINEER'S SEAL
PROVINCE OF MANITOBA
G.C. LOEPPKY
JUNE 1, 2011
Member 24656
REGISTERED PROFESSIONAL ENGINEER
CONSULTANT PROJECT NO. 11-4559-3000

Winnipeg
THE CITY OF WINNIPEG
PUBLIC WORKS DEPARTMENT

2011 BRIDGE MAINTENANCE PROGRAM
LOUISE BRIDGE PIER 5 - BEARING REFURBISHMENT
BEARING REFURBISHMENT DETAILS

CITY DRAWING NUMBER B107–11–03
SHEET 3 OF 3
BID OPPORTUNITY 461-2011

40DILLON ACAD FILE: G:\CAD\114559\Bearing Refurbishment – Detailed Design\Contract\Current\Bridge\B107–11–01.dwg