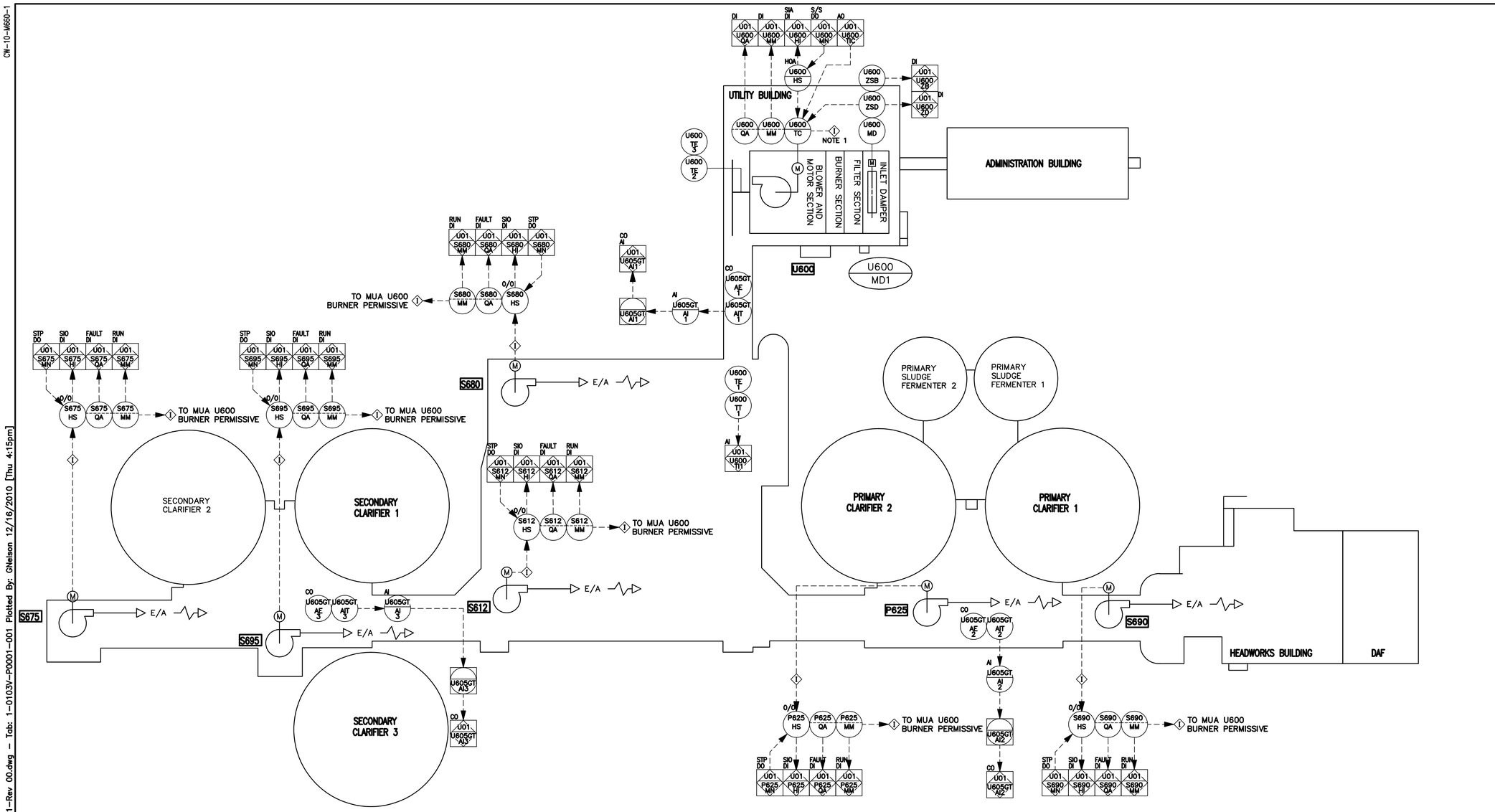

SEQUENCE OF OPERATION

DEVICE LISTING

TAG	DESCRIPTION
NON-PACKAGED	
P625-HS	EXHAUST FAN P625 HAND/OFF/AUTO SWITCH
P625-MM	EXHAUST FAN P625 RUN STATUS
P625-QA	EXHAUST FAN P625 FAULT STATUS
P625-MN	EXHAUST FAN P625 START/STOP
S612-HS	EXHAUST FAN S612 HAND/OFF/AUTO SWITCH
S612-MM	EXHAUST FAN S612 RUN STATUS
S612-QA	EXHAUST FAN S612 FAULT STATUS
S612-MN	EXHAUST FAN S612 START/STOP
S675-HS	EXHAUST FAN S675 HAND/OFF/AUTO SWITCH
S675-MM	EXHAUST FAN S675 RUN STATUS
S675-QA	EXHAUST FAN S675 FAULT STATUS
S675-MN	EXHAUST FAN S675 START/STOP
S680-HS	EXHAUST FAN S680 HAND/OFF/AUTO SWITCH
S680-MM	EXHAUST FAN S680 RUN STATUS
S680-QA	EXHAUST FAN S680 FAULT STATUS
S680-MN	EXHAUST FAN S680 START/STOP
S690-HS	EXHAUST FAN S690 HAND/OFF/AUTO SWITCH
S690-MM	EXHAUST FAN S690 RUN STATUS
S690-QA	EXHAUST FAN S690 FAULT STATUS
S690-MN	EXHAUST FAN S690 START/STOP
S695-HS	EXHAUST FAN S695 HAND/OFF/AUTO SWITCH
S695-MM	EXHAUST FAN S695 RUN STATUS
S695-QA	EXHAUST FAN S695 FAULT STATUS
S695-MN	EXHAUST FAN S695 START/STOP
U600-AE/AIT-1	UTILITIES BLDG TUNNEL CO DETECTOR & TRANSMITTER
U600-AE/AIT-2	PRIMARY CLARIFIERS BLDG TUNNEL CO DETECTOR & TRANSMITTER
U600-AE/AIT-3	SECONDARY CLARIFIERS BLDG TUNNEL CO DETECTOR & TRANSMITTER
PACKAGED	
U600-HS	EXHAUST FAN U600HAND/OFF/AUTO SWITCH
U600-TC	MUA U600 TEMPERATURE CONTOLLER
U600-MM	MUA U600 RUN STATUS
U600-QA	MUA U600 INLET DAMPER FAILURE ALARM
U600-MD	MUA U600 INLET DAMPER
U600-ZSB	MUA U600 INLET DAMPER CLOSE LIMIT
U600-ZSD	MUA U600 INLET DAMPER OPEN LIMIT
U600-TE/TT-1	MUA U600 TEMPERATURE
U600-TE2	MUA U600 DISCHARGE TEMPERATURE TRANSMITTER
U600-TE3	MUA U600 FREEZE PROTECTION

AREA/EQUIPMENT TAG	U600
FUNCTION	MUA
TYPE	DIRECT FIRED
VOLUME (L/s)	16,500
HEAT INPUT (kW)	1,289
ELEC. LOAD (kW)	

AREA/EQUIPMENT TAG	S612	S675	S680	S690	S695	P625
FUNCTION	EF	EF	EF	EF	EF	EF
TYPE	CENTRI.	CENTRI.	CENTRI.	CENTRI.	CENTRI.	CENTRI.
VOLUME (L/s)	490	1500	1500	1500	6000	6000
HEAT INPUT (kW)	N/A	N/A	N/A	N/A	N/A	N/A
ELEC. LOAD (kW)						

APEGM Certificate of Authorization KGS Group No. 245 Date: 2010/12/21

KGS GROUP CONSULTING ENGINEERS

B.M. ELEV. N/A | FIELD BOOK #:

POSTED TO LBIS

NO.	REVISIONS	DATE	BY
00	ISSUED FOR TENDER	2010-12-21	REW

ALLIANCE Engineering Services Inc.

DESIGNED BY	DDW	CHECKED BY	REW
DRAWN BY	GCN	APPROVED BY	REW
HOR. SCALE	N.T.S.	RELEASED FOR CONSTRUCTION	
VERTICAL	N.T.S.		
DATE	2009-09-15	DATE	

ENGINEER'S SEAL: PROVINCE OF MANITOBA R.E. WILLMS Member 3833 REGISTERED PROFESSIONAL ENGINEER

TENDER No. UP2.1
FILENAME :
PLOT DATE:

Winnipeg

THE CITY OF WINNIPEG
WATER AND WASTE DEPARTMENT

2010 HVAC REPLACEMENT AND ASSOCIATED WORKS
WEWPCC
AREA U – TUNNEL VENTILATION PROCESS & INSTRUMENTATION DIAGRAM

SHEET 1 OF 1

CITY DRAWING NUMBER
1-0103V-P0001-001

CW-10-M660-1

FileName: P:\Projects\2009\09-0754-08\Doc.Control\ToBeIssued\DWG\ELECTRICAL\1-0103V-P0001-001-Rev 00.dwg – Tab: 1-0103V-P0001-001 Plotted By: GNelson 12/16/2010 [Thu 4:15pm]