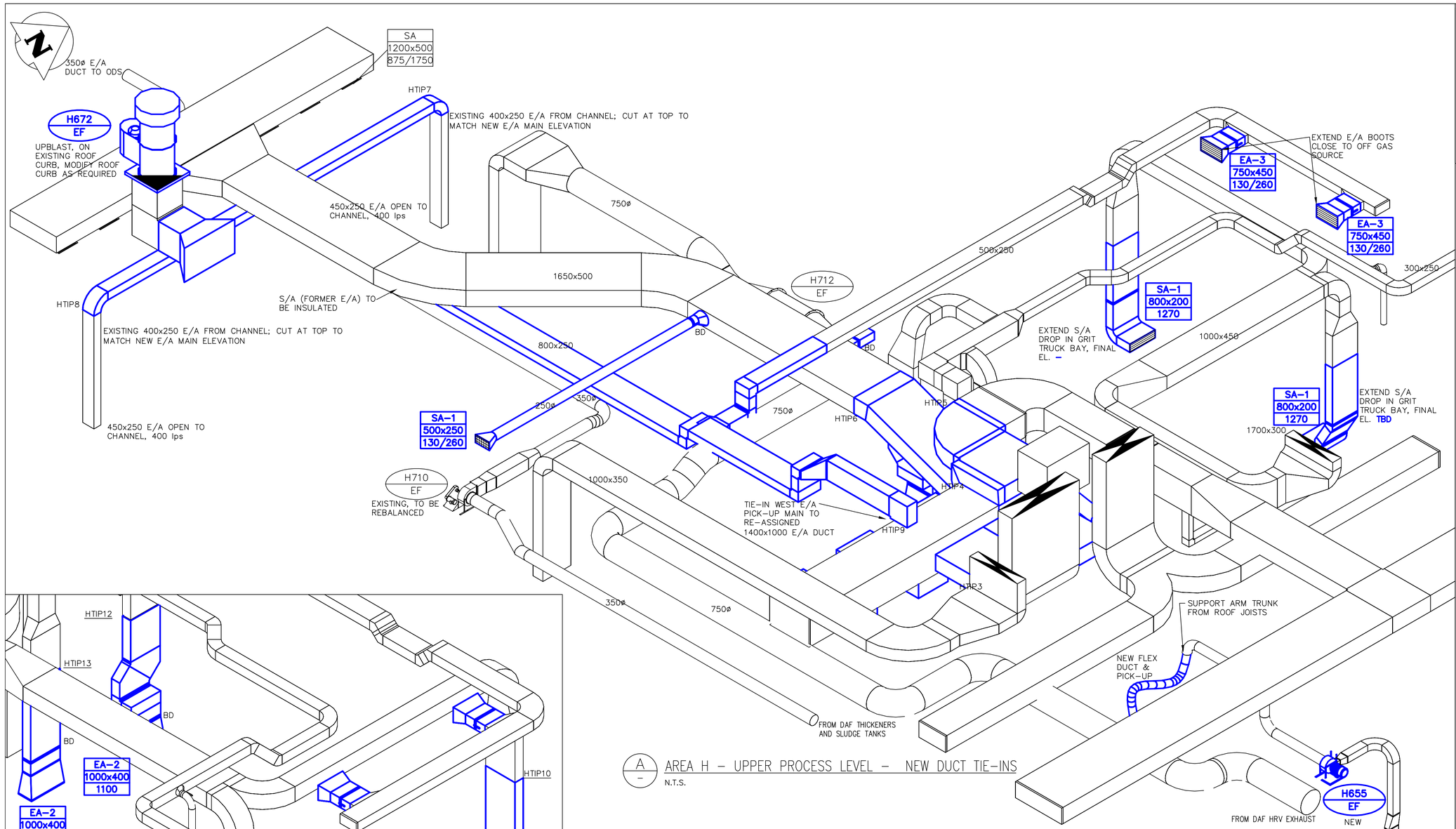

A – AREA H – UPPER PROCESS LEVEL – NEW DUCT TIE-INS

N.T.S.

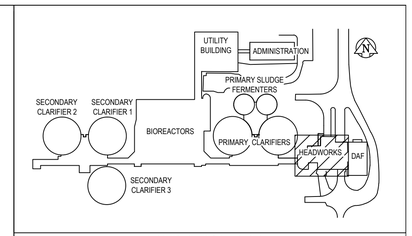

KEY PLAN

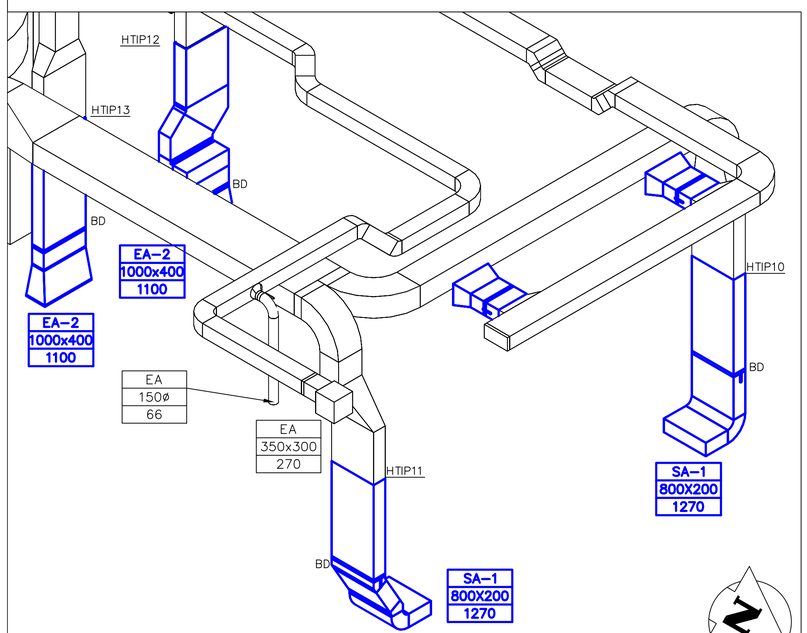

B – GRIT TRUCK BAY DUCTWORK MODIFICATIONS – ISOMETRIC

N.T.S.

HEADWORKS GRIT TRUCK BAY TIP SCHEDULE

TIP NO.	DESCRIPTION.	NOTES
HTIP10	EXTEND EXISTING S/A DUCT RISER TO LOWER ELEVATION	W SIDE, STRAIGHT DROP
HTIP11	EXTEND EXISTING S/A DUCT RISER TO LOWER LEVEL	E SIDE, VERTICAL OFFSET TO CLEAR EXISTING PIPING
HTIP12	EXTEND EXISTING E/A DUCT RISER TO LOWER LEVEL	W SIDE, VERTICAL & HORIZONTAL OFFSET REQ'D TO CLEAR EXIST. PIPING
HTIP13	EXTEND EXISTING E/A DUCT RISER TO LOWER LEVEL	E SIDE STRAIGHT DROP

APEGM Certificate of Authorization
Alliance Engineering Services Inc.
No.2906 Date: _____

B.M. ELEV. | FIELD BOOK #:
POSTED TO LBIS

NO.	REVISIONS	DATE	BY
00	ISSUED FOR TENDER	2010-12-21	AFG

ALLIANCE Engineering Services Inc.

DESIGNED BY	JC/AS	CHECKED BY	AFG
DRAWN BY	AS	APPROVED BY	
HOR. SCALE	NTS	RELEASED FOR CONSTRUCTION	
VERTICAL	NTS		
DATE	2010-06-23	DATE	

ENGINEER'S SEAL: PROVINCE OF MANITOBA – A.F.G. GOSSEN – REGISTERED PROFESSIONAL ENGINEER

CONSULTANT DRAWING NO. HM2.16

Winnipeg
THE CITY OF WINNIPEG
WATER AND WASTE DEPARTMENT

2010 HVAC REPLACEMENT AND ASSOCIATED WORKS
WEWPCC
AREA H – HEADWORKS
UPPER PROCESS LEVEL – NEW CONDITIONS ISOMETRICS

SHEET 1 OF 1
CITY DRAWING NUMBER
1-0103G-M0032-001