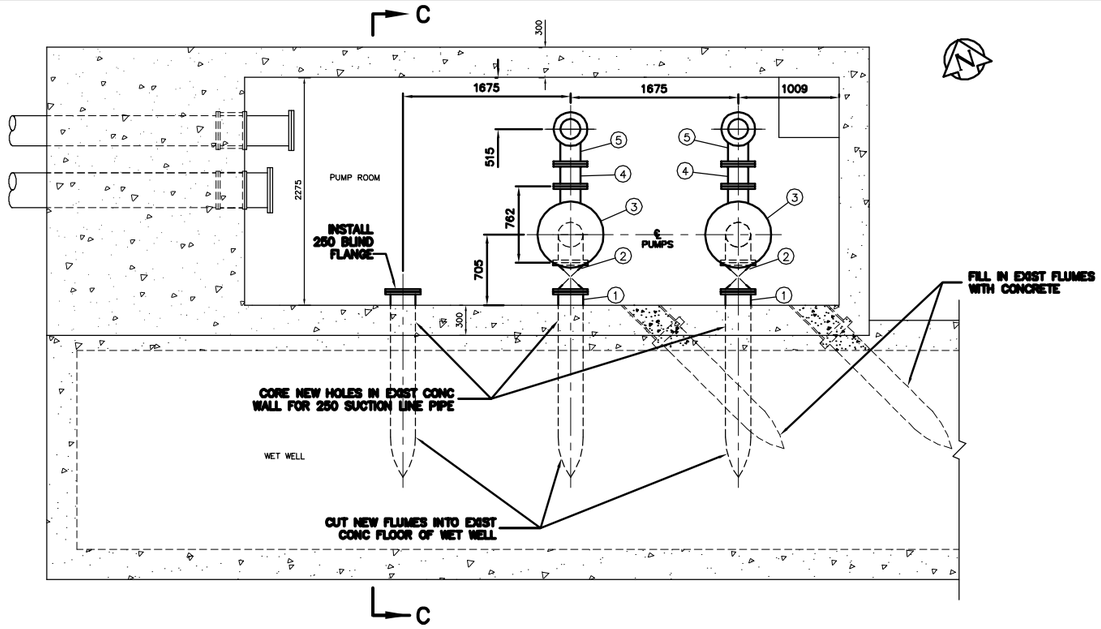

PUMP ROOM
PLAN VIEW – ELEV 222.200
SCALE 1:30

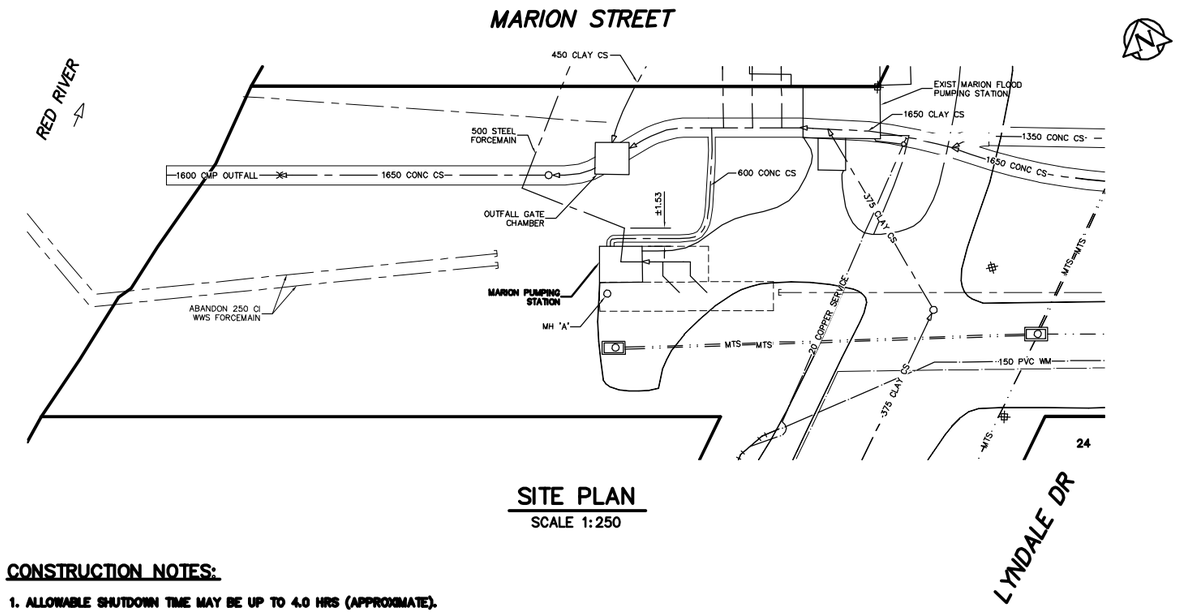

SITE PLAN
SCALE 1:250

CONSTRUCTION NOTES:

1. ALLOWABLE SHUTDOWN TIME MAY BE UP TO 4.0 HRS (APPROXIMATE).
2. CRITICAL BASEMENT ELEVATION: 233.172m
3. REMOVE EXISTING PUMPS, PIPING AND OTHER MATERIALS AS-REQUIRED.
4. PROVIDE TEMPORARY PUMPING OF WASTEWATER DURING CONSTRUCTION.
5. INSTALL PIPING AND MECHANICAL WORK AS INDICATED AND ACCORDING TO MANUFACTURER'S SPECIFICATIONS.
6. EXCAVATIONS TO BE BACKFILLED WITH CLASS 3 OR 5 BACKFILL IN ACCORDANCE WITH CW 2030 AND SD-002.
7. FLANGED NUTS AND BOLTS TO BE ASTM A307 EXCEPT IN WET WELLS WHICH ARE TO BE ASTM A276 TYPE 316 SS.
8. GASKETS TO BE FULL FACED, 3mm THICK RED RUBBER.
9. ALL ANCHOR BOLTS TO BE ASTM A276 TYPE 316 SS.
10. CONTRACTOR RESPONSIBLE TO CONFIRM ALL DIMENSIONS BEFORE FABRICATION AND ASSEMBLY OF MATERIALS AND COMPONENTS.

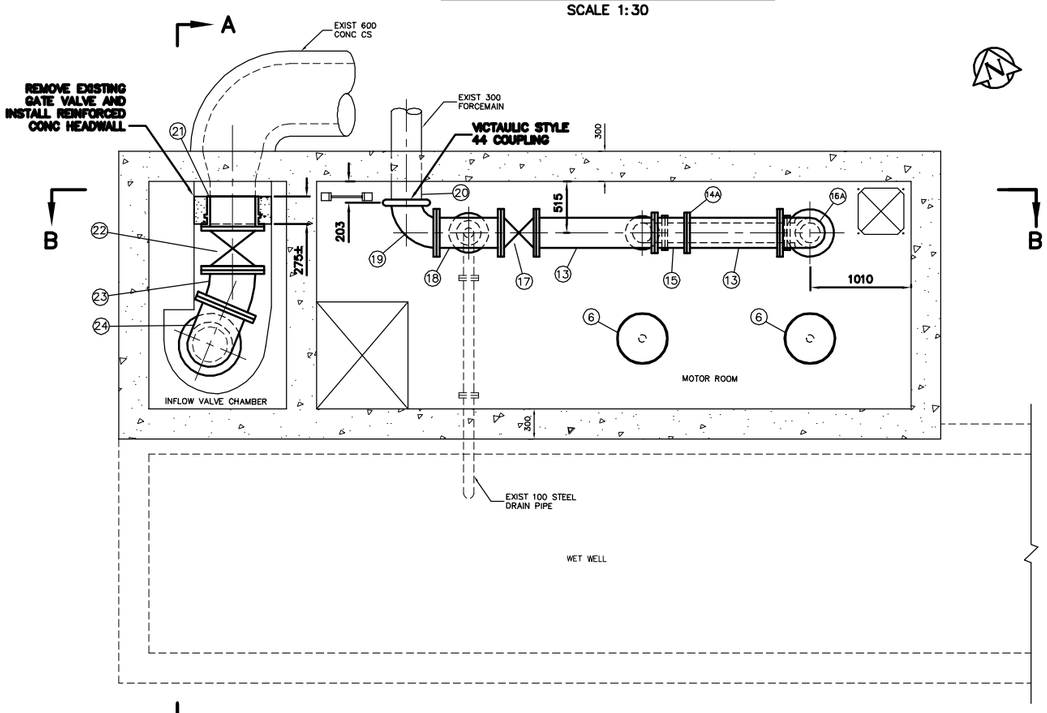

MOTOR ROOM
PLAN VIEW – ELEV 225.000
SCALE 1:30

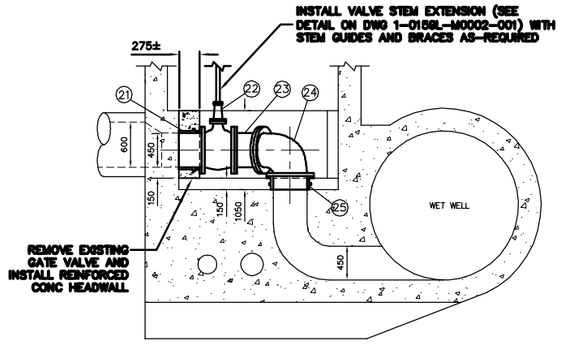

SECTION A–A
SCALE 1:30

MATERIALS LIST

ITEM	DESCRIPTION	ENDS	LENGTH	QUANTITY
1	250ø SUCTION PIPE	FL X PE	–	2
2	250ø GATE VALVE WITH RISING STEM	FL X FL	292	2
3	FLOWSERVE MODEL 8MFV-8 PUMP	FL	762	2 *
4	200ø PIPE	FL	222±	2
5	200ø CAST IRON 90° LONG RADIUS ELBOW	FL	–	2
6	PUMP MOTOR	–	–	2
7	200ø SWING CHECK VALVE	FL	495±	2
8	200ø GATE VALVE WITH RISING STEM	FL	292±	2
9	200ø PIPE	FL X PE	876±	2
10	200ø UNIFLANGE	FL	–	2
11	200ø PIPE	FL	1176±	2
12	300 X 200 X 200 TEE	FL	–	1
13	300ø PIPE	FL X FL/PE	AS REQ'D	3
14	300ø UNIFLANGE	FL	–	1
14A	300ø UNIFLANGE	FL	–	1
15	300ø ELECTROMAGNETIC FLOW METER	FL	–	1
16	200ø CAST IRON 90° STD RADIUS BEND	FL X FL	–	1
16A	300ø CAST IRON 90° STD RADIUS BEND	FL	–	2
17	300ø GATE VALVE WITH RISING STEM	FL	356±	1
18	300 X 300 X 250 REDUCING TEE	FL	601	1
19	300ø CAST IRON 90° ELBOW	FL X VICT 44	–	1
20	EXISTING 300ø WALL PEICE	VICT 44	–	1 **
21	450ø D.I. FLANGE ADAPTOR OR WALL THIMBLE	FL X PE	–	1
22	450ø GATE VALVE WITH RISING STEM	FL X FL	432	1
23	450ø 22.5° CAST IRON BEND	FL X FL	–	1
24	450ø 90° CAST IRON BEND	FL X FL	–	1
25	450ø D.I. FLANGE ADAPTOR OR WALL THIMBLE	–	–	1
26	250ø BLIND FLANGE WITH 100ø FLANGED OUTLET	FL X FL	–	1
27	100ø FLANGED GATE VALVE	FL X FL	–	1
28	100ø STEEL SPOOL PIECE	FL X FL	–	1

NOTE:
ALL LENGTHS & DIMENSIONS SHOWN AS ± TO BE FIELD CONFIRMED BY CONTRACTOR
* ITEMS EXIST OR SUPPLIED BY CITY
** ITEMS TO BE REUSED
– CONTRACTOR TO SUPPLY AND INSTALL POWER CABLES AND CONDUIT FROM PUMP MOTORS TO ELECTRICAL CONTROL PANEL IN STATION

METRIC
WHOLE NUMBERS INDICATE MILLIMETRES
DECIMALIZED NUMBERS INDICATE METRES

EXISTING	LEGEND–PLAN	PROPOSED	EXISTING	LEGEND–PLAN	PROPOSED	EXISTING	LEGEND–PROFILE	PROPOSED
200 WM	WATERMAIN	200 WM		SL , HYDRO		150 WM	WATERMAIN	150 WM
	HYDRANT			MTS			HYDRANT	
	VALVE			TRAFFIC SIGNALS			VALVE	
525 LDS	LAND DRAINAGE SEWER	525 LDS	50 GAS	GAS	50 GAS	300 LDS	LAND DRAINAGE SEWER	300 LDS
375 WWS	WASTEWATER SEWER	375 WWS		SURVEY BAR		250 WWS	WASTEWATER SEWER	250 WWS
	MANHOLE			FENCE			℄ PROFILE	
	CATCH BASIN			POLE – HYDRO, MTS			GROUND ABOVE PIPE	
	CURB INLET			CURB STOP			℄ DITCH (NORTH & WEST)	
	JUNCTIONS			GUY ANCHOR			℄ DITCH (SOUTH & EAST)	
	CULVERT			LIGHT STANDARD			GUTTER (NORTH & WEST)	
	ANODE			TREE			GUTTER (SOUTH & EAST)	

LOCATION APPROVED
UNDERGROUND STRUCTURES

SUPV. U/G STRUCTURES COMMITTEE — DATE

NOTE:
LOCATION OF UNDERGROUND STRUCTURES AS SHOWN ARE BASED ON THE BEST INFORMATION AVAILABLE BUT NO GUARANTEE IS GIVEN THAT ALL EXISTING UTILITIES ARE SHOWN OR THAT THE GIVEN LOCATIONS ARE EXACT. CONFIRMATION OF EXISTENCE AND EXACT LOCATION OF ALL SERVICES MUST BE OBTAINED FROM THE INDIVIDUAL UTILITIES BEFORE PROCEEDING WITH CONSTRUCTION.

B.M. ELEV. — FIELD BOOK #
POSTED TO LBIS

NO.	REVISIONS	DATE	BY

CITY OF WINNIPEG
WATER AND WASTE
ENGINEERING DIVISION

DESIGNED BY	DB	CHECKED BY	KZ
DRAWN BY	CJH	APPROVED BY	KZ
HOR. SCALE	AS	RELEASED FOR CONSTRUCTION	K.R. ZUREK
VERTICAL	SHOWN		
DATE	2010 10 04	DATE	2010 10 04

ENGINEER'S SEAL
ORIGINAL SIGNED BY K.R. ZUREK 10/10/04

BID OPPURTUNITY: 760–2010
FILENAME : 1–0159L–M0001–001.dwg
PLOT DATE: 2010 10 04

Winnipeg
THE CITY OF WINNIPEG
WATER AND WASTE DEPARTMENT

INSTALLATION OF PUMPING UNITS AND BUILDING UPGRADES TO THE
MARION PUMPING STATION
MECHANICAL SITE PLAN AND PLAN VIEWS

CITY DRAWING NUMBER
1–0159L–M0001–001