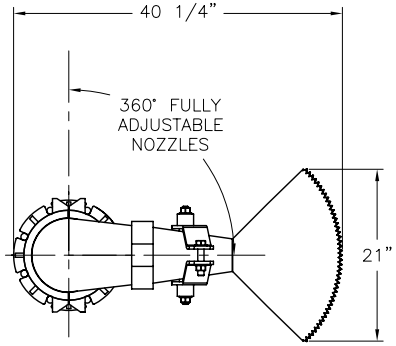

NOTES:

1. MIXING NOZZLE ASSEMBLY WEIGHT: 537 LBS.
2. FINISH: AS SPECIFIED ON LIST OF EQUIP. IN ENGINEERING SUBMITTAL.
3. ALL FASTENERS TO BE 300 SERIES STAINLESS STEEL.
4. THIS NOZZLE IS DESIGNED TO BE AN INTEGRAL PART OF VAUGHAN'S ROTAMIX TM SYSTEM. THE DISCHARGE NOZZLES ARE DESIGNED TO MIX THE DIGESTER OR STORAGE TANK IN A ROTATIONAL MANNER.
5. ALL COMPONENTS ARE MADE OF GLASS-LINED DUCTILE IRON ASTM A536, EXCEPT DEFLECTOR WHICH IS STAINLESS STEEL.
6. 360° FULLY ADJUSTABLE NOZZLES ARE TO BE POSITIONED IN THE FIELD BY VAUGHAN.

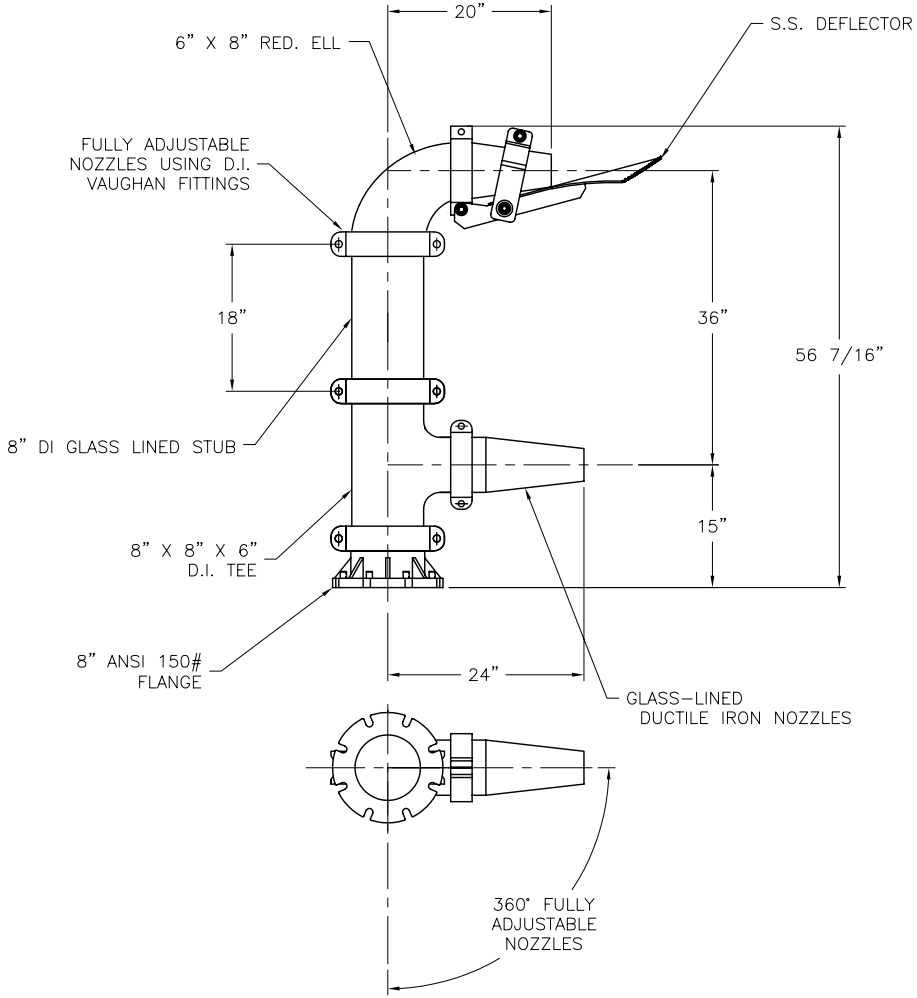

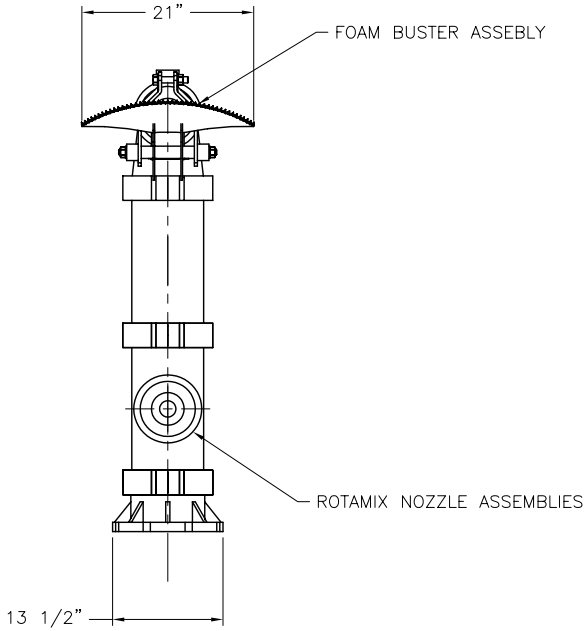

Vaughan

VAUGHAN CO., INC.
364 MONTE-ELMA ROAD
MONTESANO, WA 98563
PHONE: (360) 249-4042
FAX: (360) 249-6155

THIS DRAWING IS THE PROPERTY OF VAUGHAN COMPANY INC. IT IS FURNISHED FOR YOUR CONFIDENTIAL INFORMATION PURPOSES ONLY, AND IS NOT TO BE DISCLOSED TO ANYONE ELSE OR REPRODUCED OR USED FOR MANUFACTURING PURPOSES WITHOUT THE EXPRESS WRITTEN CONSENT OF VAUGHAN COMPANY INC.

TITLE:
OUTLINE DIMENSIONS
PM8-1N W/ FOAM BUSTER
(PIPE MOUNTED)
ROATAMIX NOZZLE ASSEMBLY
W/ FOAM BUSTER ASSEMBLY

UNLESS OTHERWISE NOTED TOLERANCES ARE TO BE:
SURFACE FINISH: 125 MICROINCHES
DIMENSIONS: BENDING ±1/16"
DIMENSIONS: MACHINING ±0.030"
DIMENSIONS: MACHINING ±0.010"
GEOMETRIC TOLERANCE, PERPENDICULARITY: 0.010"
GEOMETRIC TOLERANCE, PARALLELISM: 0.005"
BREAK ALL MACHINE EDGES 0.005" R UNLESS NOTED OTHERWISE

CHECKED:	ENGINEER:	DRAWN BY:	SCALE:	PART NUMBER:
GRD	GRD	KCW	1" = 1'	
JOB ORDER NUMBER:		DATE: 2/25/09	DRAWING NUMBER: 113128	REVISION NUMBER: 0