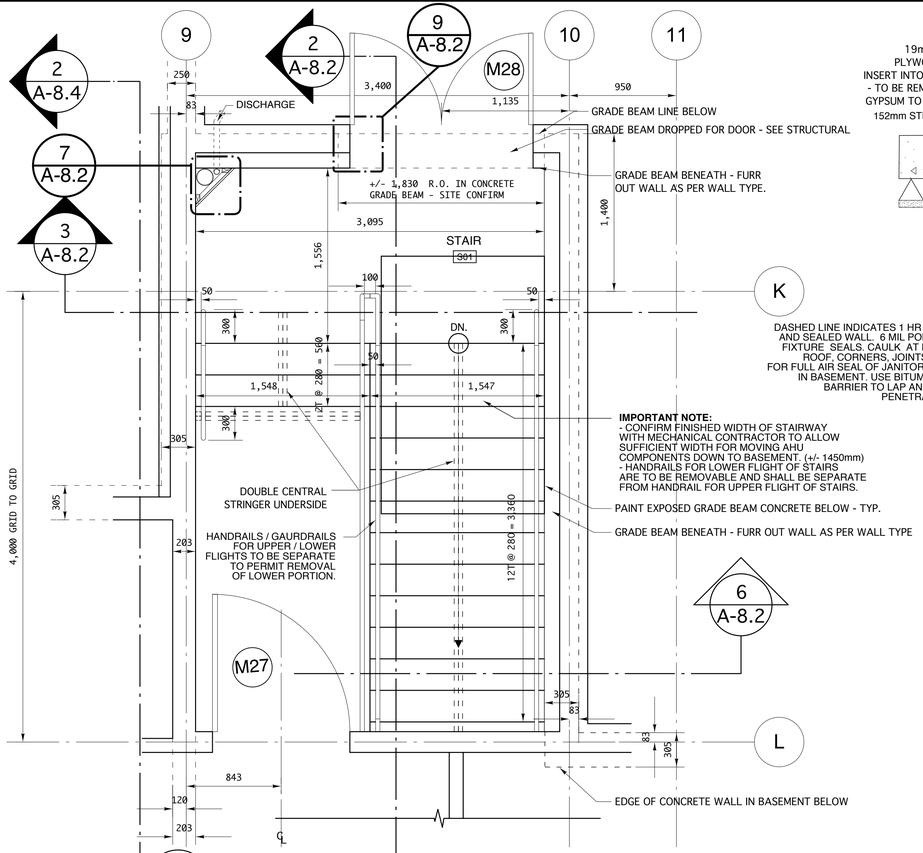

1 / 8.2 NORTH STAIR PLAN
SCALE 1:25

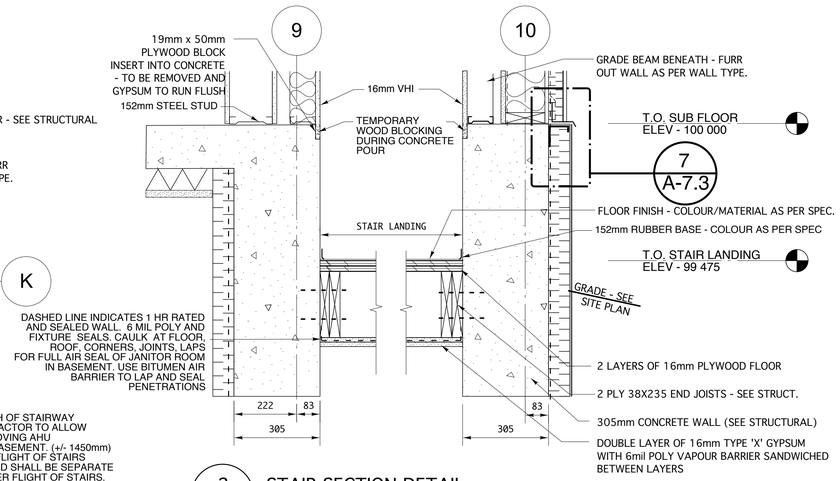

3 / 8.2 STAIR SECTION DETAIL
SCALE 1:10

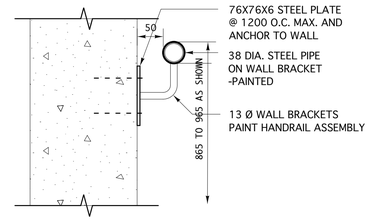

4 / 8.2 STAIRWAYS HANDRAIL (CONCRETE)
SCALE 1:5

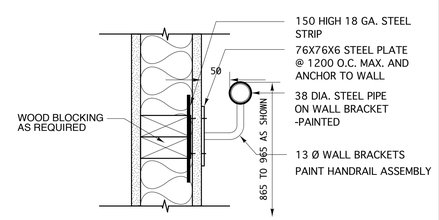

5 / 8.2 STAIRWAYS HANDRAIL (STUD WALL)
SCALE 1:5

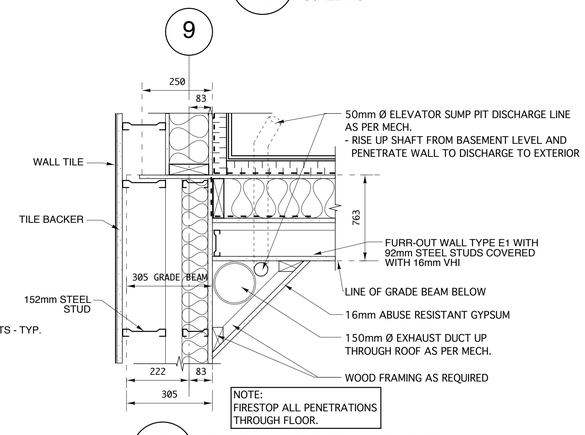

7 / 8.2 SUMP PUMP PIPE RISER DET.
SCALE 1:10

NOTE: ALL INTERIOR WALLS AND CEILINGS AT STAIRS TO BE 1HR RATED - ALL PENETRATIONS TO BE FIRESTOPPED

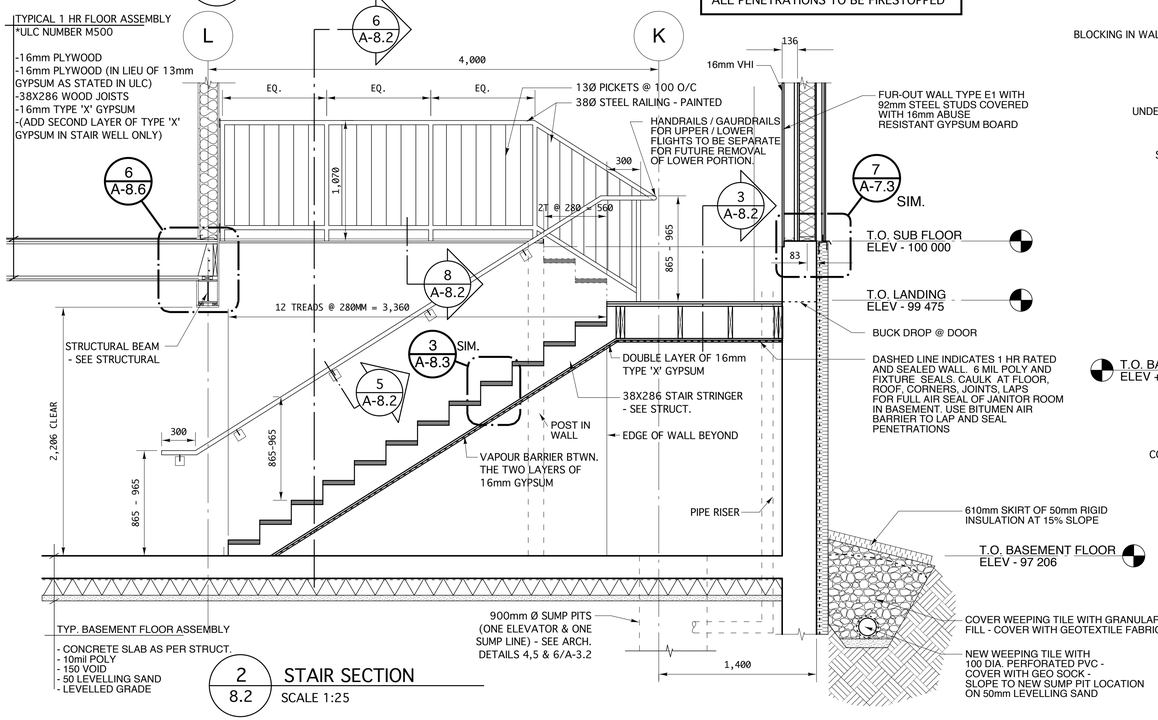

2 / 8.2 STAIR SECTION
SCALE 1:25

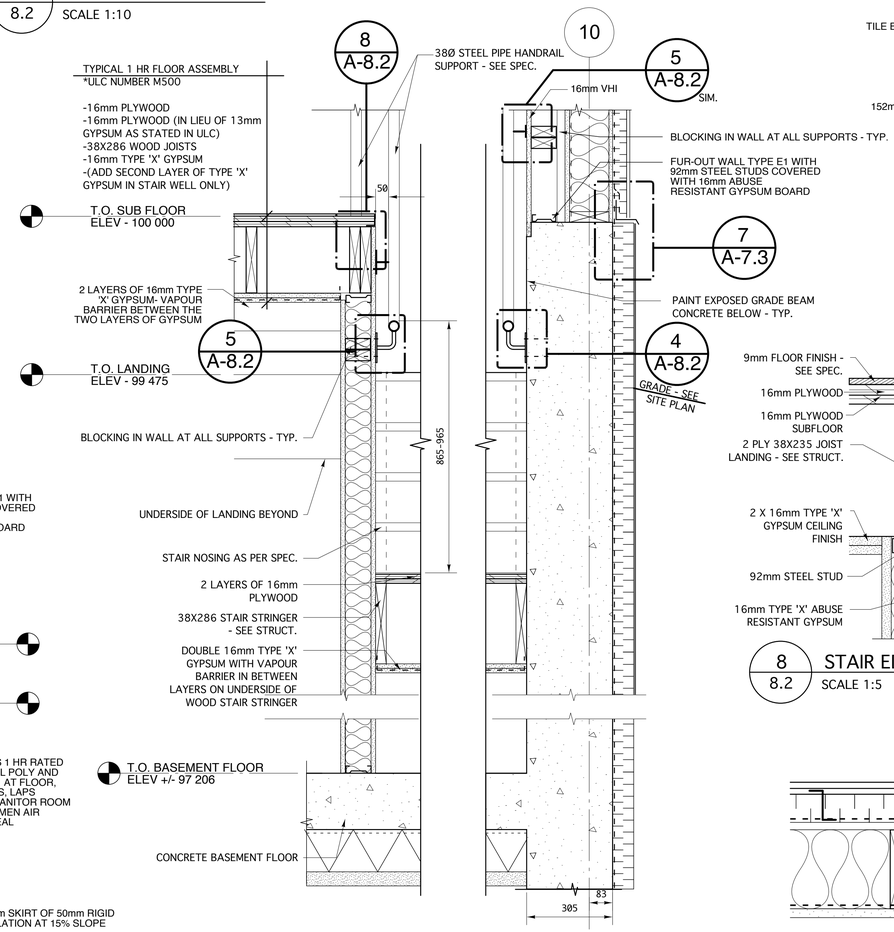

6 / 8.2 NORTH STAIR DETAIL
SCALE 1:10

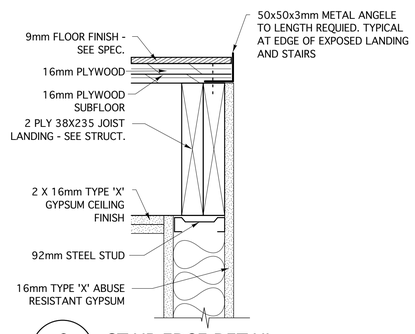

8 / 8.2 STAIR EDGE DETAIL
SCALE 1:5

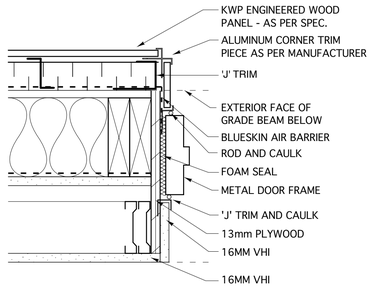

9 / 8.2 DOOR DETAIL
SCALE 1:5

revision

This drawing must not be scaled.

The Contractor must verify all dimensions, datums and levels prior to commencement of work. All errors and omissions must be reported immediately to the Contract Administrator.

Variations and modifications to work shown on this drawing shall not be carried out without written permission from the Contractor Administrator.

This drawing is the exclusive property of the Architect and cannot be reproduced without written permission of the Architect. Reproduction must bear the name of the Architect. Copyright © 2010.

PROVINCE OF MANITOBA — HAROLD G. FUNK — ARCHITECT — 26/02/2010 — No. 078 — REGISTERED ARCHITECTURAL CORPORATION

PROVINCE OF MANITOBA — HAROLD G. FUNK — 26/02/2010 — REGISTERED ARCHITECT

harold funk architect inc.

Harold Funk Architect Inc.
Architecture and Urban Design

401-55 Donald Street, Winnipeg, Manitoba R3C 1L8
T (204) 943-5087 info@funkarchitect.com
F (204) 949-9231 funkarchitect.com

project

SINCLAIR PARK COMMUNITY CENTRE
Winnipeg, Manitoba

sheet title

STAIR PLANS/SECTIONS AND DETAILS

project number:	08-011	**drawing number:**
scale:	AS SHOWN	A-8.2
drawn by:	B.F.	
approved by:	H.F.	
date:	26th FEB 2010	