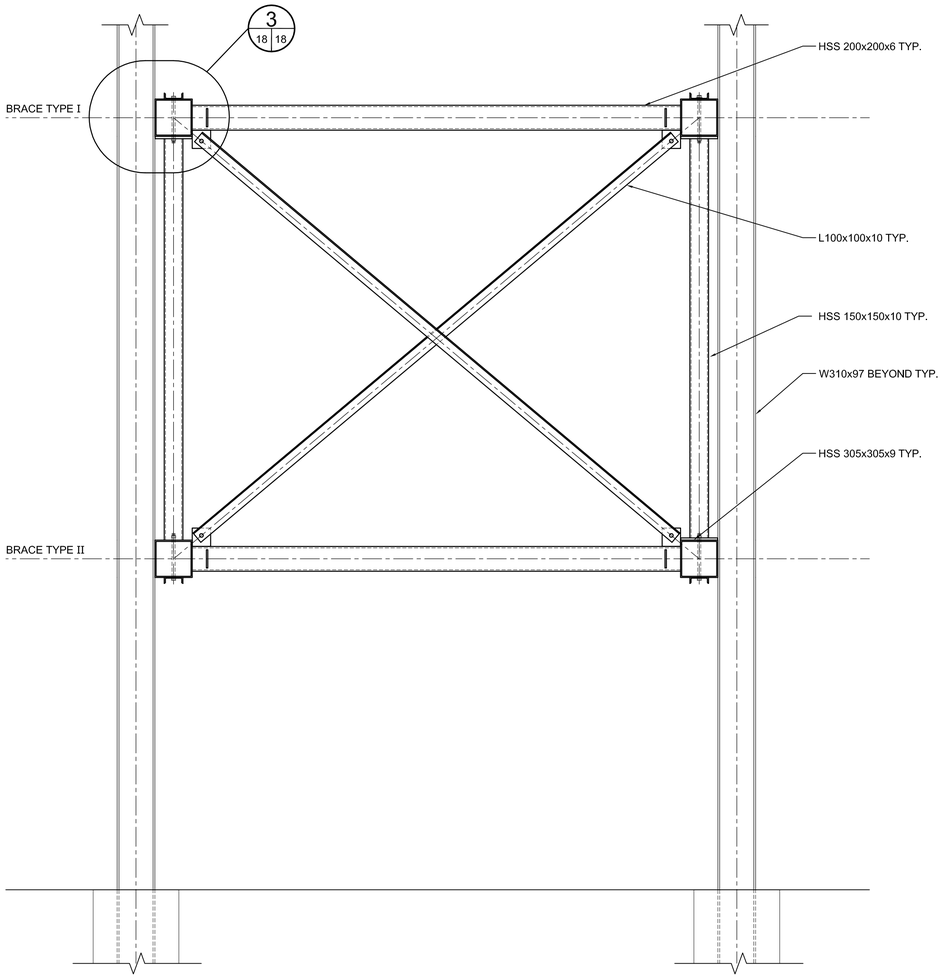

SECTION A (16 18)
1:10

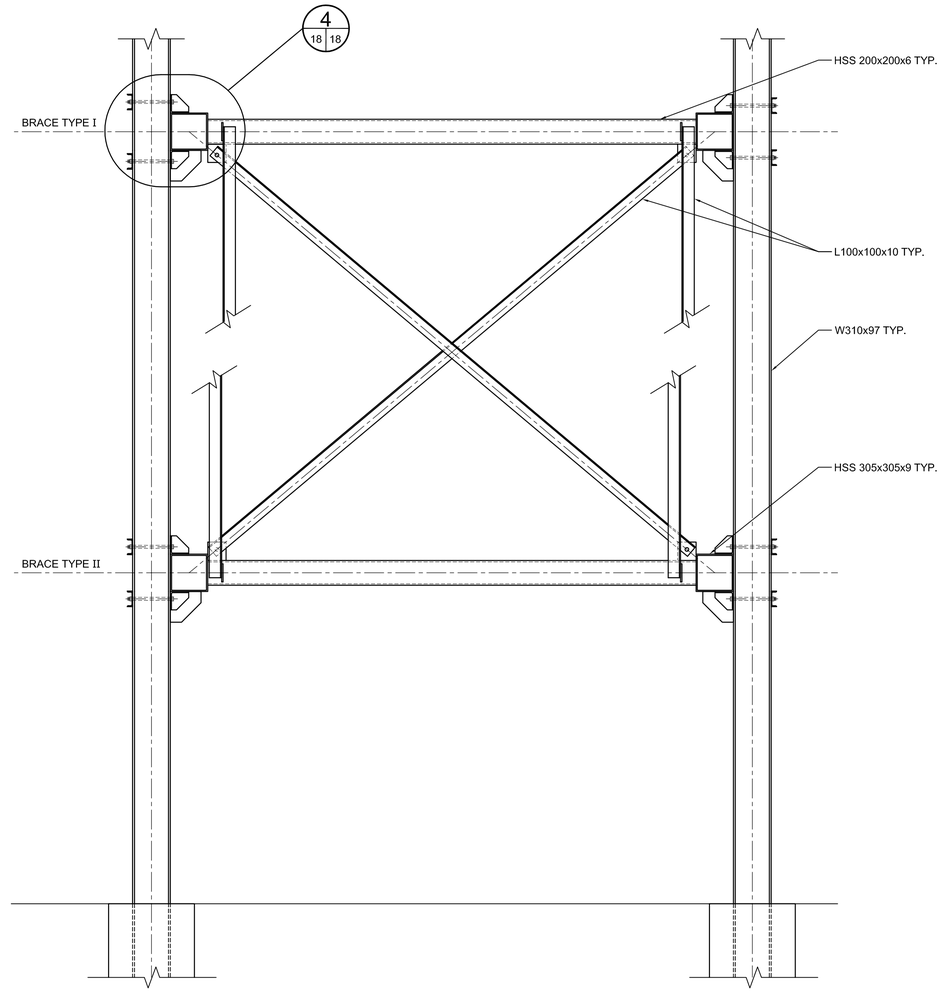

SECTION B (16 18)
1:10

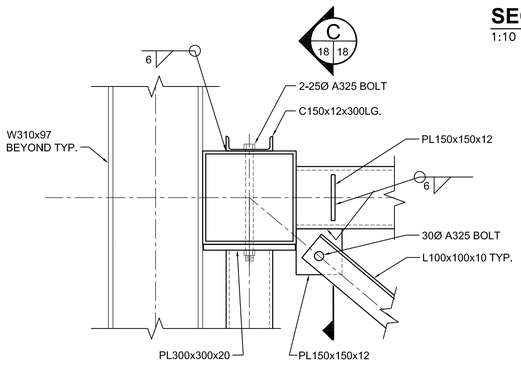

DETAIL 3 (18 18)
1:10

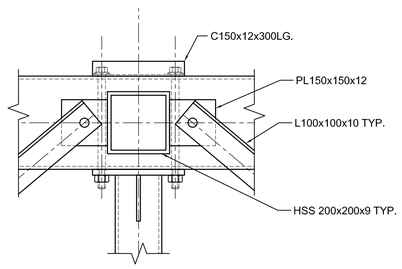

SECTION C (18 18)
1:10

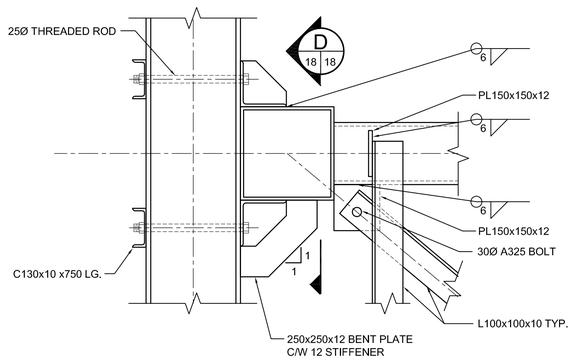

DETAIL 4 (18 18)
1:10

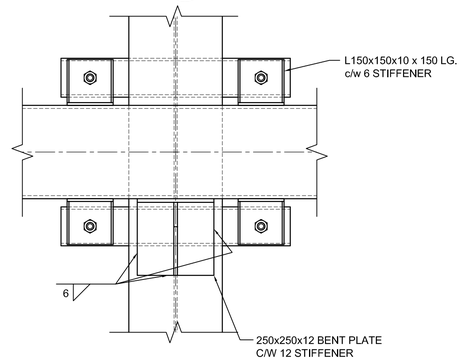

SECTION D (18 18)
1:10

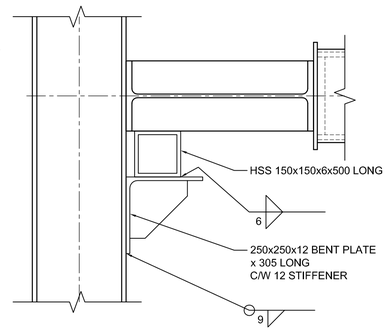

DETAIL 5 (16 18)
1:10

APEGM
Certificate of Authorization
AECOM Canada Ltd.
No. 4671 Date: 2009.10.13

DO NOT SCALE THIS DOCUMENT. ALL MEASUREMENTS MUST BE OBTAINED FROM STATED DIMENSIONS.
This drawing has been prepared for the use of AECOM's client and may not be used, reproduced or relied upon by third parties, except as agreed by AECOM and its client, as required by law or for use by governmental reviewing agencies. AECOM accepts no responsibility, and denies any liability whatsoever, to any party that modifies this drawing without AECOM's express written consent.

LOCATION UNDERGROUND STRUCTURES — APPROVED

SUPV. U/G STRUCTURES COMMITTEE — DATE

NOTE:
LOCATION OF UNDERGROUND STRUCTURES AS SHOWN ARE BASED ON THE BEST INFORMATION AVAILABLE, BUT NO GUARANTEE IS GIVEN THAT ALL EXISTING UTILITIES ARE SHOWN OR THAT THE GIVEN LOCATIONS ARE EXACT. CONFIRMATION OF EXISTENCE AND EXACT LOCATION OF ALL SERVICES MUST BE OBTAINED FROM THE INDIVIDUAL UTILITIES BEFORE PROCEEDING WITH CONSTRUCTION.

B.M. ELEV.

NO.	REVISIONS	DATE	BY
0	ISSUED FOR TENDER	10.13.09	KAA

DESIGNED BY	FK
DRAWN BY	KAA
CHECKED BY	RE/KC
APPROVED BY	EBL
HOR. SCALE	AS NOTED
VERTICAL	
DATE	2009.10.13

AECOM

RELEASED FOR CONSTRUCTION
DATE

ENGINEER'S SEAL
PROVINCE OF MANITOBA
ORIGINAL SIGNED BY
F. A. KEMP
2009/10/13
REGISTERED PROFESSIONAL ENGINEER

CONSULTANT PROJECT NO.
088813

Winnipeg

THE CITY OF WINNIPEG
TRANSIT DEPARTMENT

SOUTHWEST RAPID TRANSIT CORRIDOR - STAGE 1
TRANSITWAY TUNNEL AT CN RIVER SUBDIVISION
MILEAGE 1.38 & ASSOCIATED WORKS

BRACED SHORING DETAILS SHEET 2 OF 2

CITY DRAWING NUMBER: U237-09-18
SHEET 18 OF 73
CONSULTANT DRAWING NUMBER: C4-S1006-T

L:\work\112000\112607\02a-CAD\Pj_Drawings\STR\CONTR\577-2009_BRACED SHORING DETAILS SHEET 2 OF 2_C4S1006-T-R0.dwg