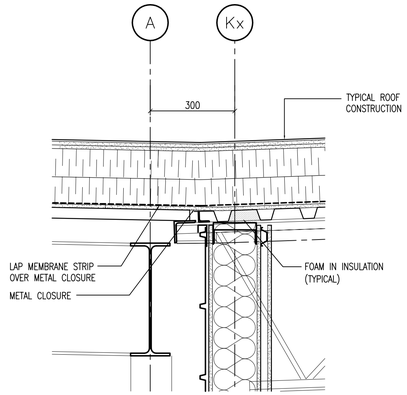


19 A4.3 A7.2 **SECTION DETAIL**
SCALE: 1 : 10

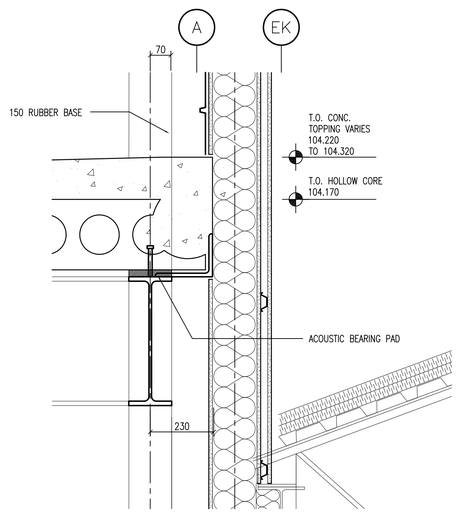


20 A4.3 A7.2 **SECTION DETAIL**
SCALE: 1 : 10

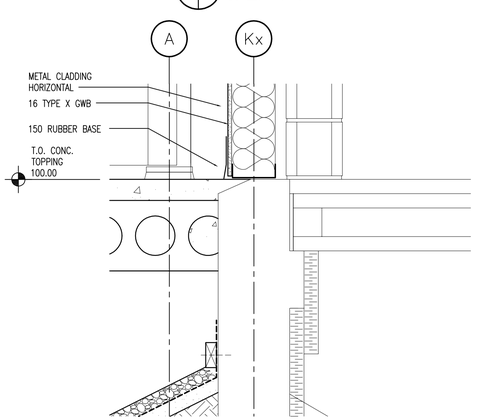


21 A4.3 A7.2 **SECTION DETAIL**
SCALE: 1 : 10

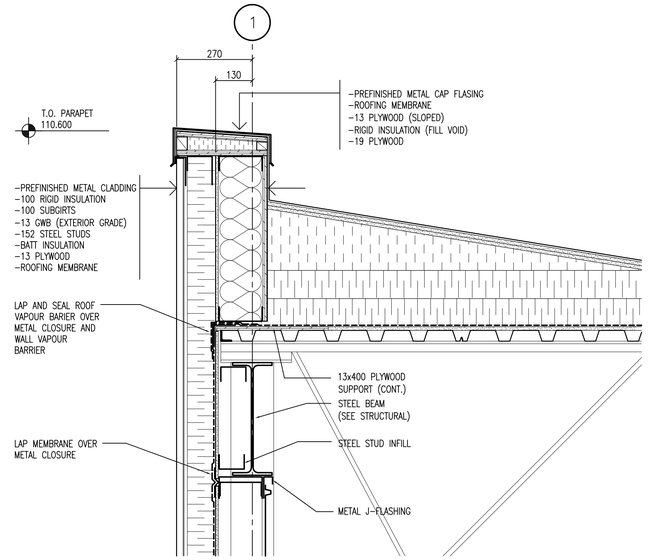


22 A4.3 A7.2 **SECTION DETAIL**
SCALE: 1 : 10

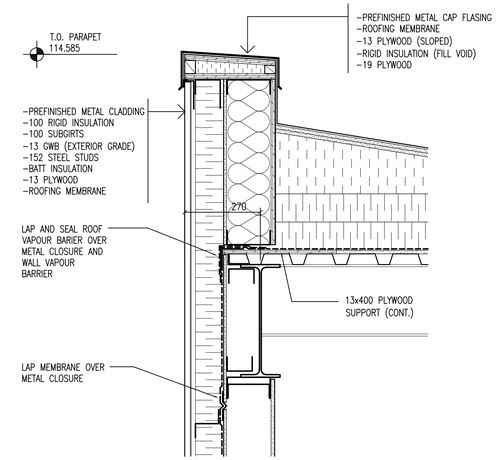


24 A4.1 A7.2 **SECTION DETAIL**
SCALE: 1 : 10

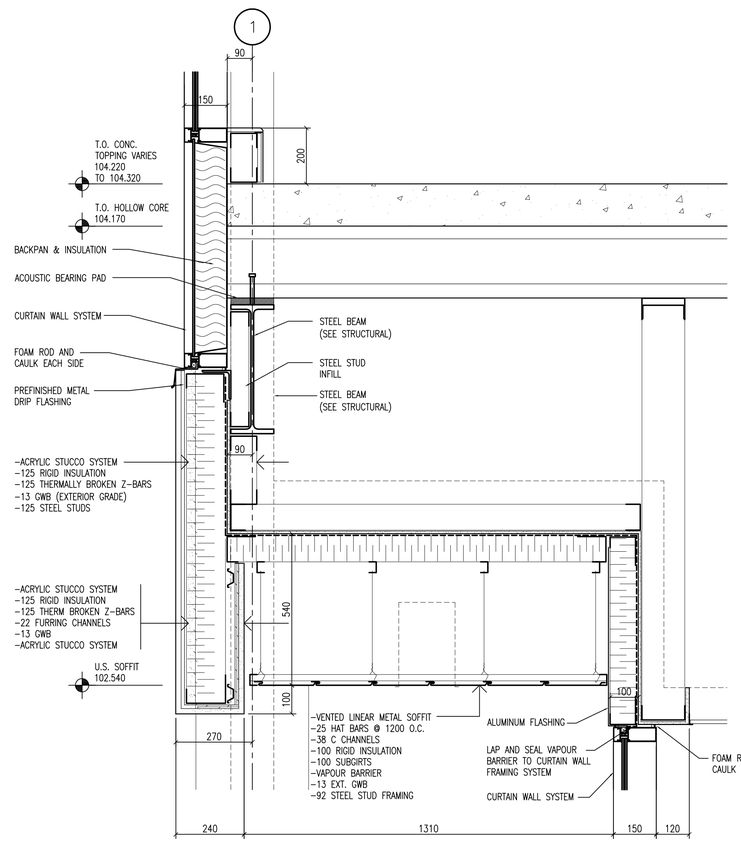


23 A4.4 A7.2 **SECTION DETAIL**
SCALE: 1 : 10

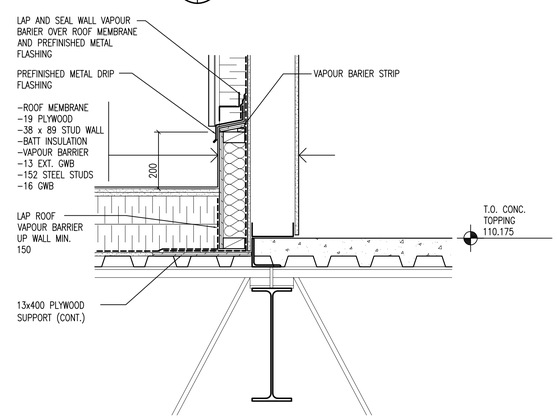


25 A4.1 A7.2 **SECTION DETAIL**
SCALE: 1 : 10

**NOTES :**

THESE DRAWINGS SHALL NOT BE SCALED.

THE CONTRACTOR SHALL VISIT THE SITE AND SATISFY ONESELF ALL DIMENSIONS, DATUM, AND DETAILED INFORMATION SHOWN ARE CORRECT.

THE CONTRACTOR IS TO REVIEW AND COORDINATE ALL ARCHITECTURAL, MECHANICAL, ELECTRICAL AND STRUCTURAL DRAWINGS FOR ADDITIONAL OPENINGS THROUGH FLOORS, WALLS, AND CEILINGS FOR DUCT, PIPE & ELECTRICAL RISERS AND ALL OPENINGS NOT SHOWN ON DRAWINGS.

ALL OPENINGS THROUGH FIRE ASSEMBLIES ARE TO BE FIRE STOPPED AND SEALED WITH ULC APPROVED FIRE STOPPING TO MAINTAIN THE INTEGRITY OF THE FIRE SEPARATION, AND PROVIDE A SMOKE-TIGHT BARRIER.

ALL PRODUCTS AND MATERIALS TO BE USED AND INSTALLED SHALL CONFORM WITH MANUFACTURER'S SPECIFICATIONS & APPLICABLE CODES.

THE CONTRACTOR SHALL BE RESPONSIBLE TO PATCH AND MAKE GOOD ALL EXISTING CONSTRUCTION AFFECTED BY THE REMOVAL OF ALL ITEMS FORMING THE PART OF THE RENOVATION WORK.

WHERE NEW FLOORING AND BASE IS TO BE INSTALLED IN EXISTING AREAS (REFER TO FLOOR PLAN AND ROOM SCHEDULE) THE EXISTING FLOORING SURFACE AND BASE MUST BE REMOVED, UNLESS OTHERWISE NOTED. ALL FLOOR SURFACES SHALL BE PREPARED IN ACCORDANCE TO MANUFACTURER'S RECOMMENDATIONS FOR INSTALLATION OF NEW FLOOR.

WHERE PAINTING OF EXISTING WALLS IS INDICATED ON THE ROOM SCHEDULE, THESE WALLS MUST BE CLEANED OF ANY EXISTING WALL COVERING, PATCHED & PREPARED TO ACCEPT NEW MATERIAL, UNLESS OTHERWISE NOTED.

| NO. | REVISION/DESCRIPTION | BY | DATE |
|---|---|---|---|
| | | | |

**SEALS**

| | | | |
|---|---|---|---|
| **DRAWN BY** | CAD | **CHECKED BY** | **APPROVED** |
| **DATE** | 2007 July 20 | **USER APPROVAL** | |

Winnipeg

**CITY OF WINNIPEG**
**PLANNING, PROPERTY & DEVELOPMENT DEPARTMENT**
**CIVIC ACCOMMODATIONS DIVISION**
**300 – 65 GARRY ST. R3C 4K4**

**PROJECT**

CONSTRUCTION OF
CINDY KLASSEN RECREATION COMPLEX
FACILITY ENHANCEMENT PROJECT

999 Sargent Ave, Winnipeg, MB

**SHEET TITLE**

SECTION DETAILS

| SCALE | PROJECT NO. | SHEET NO. |
|---|---|---|
| AS SHOWN | 2005-059 | A7.2 |

DRAWING SHEET SIZE: A1 (841mm x 594mm) PLOT 1:1


Neil Cooper Architect Inc.
10-395 Berry Street, Winnipeg, Manitoba R3J 1N6


**ADDRESS:** 999 Sargent Ave, Winnipeg, MB **PROJECT No:** 06024 **DATE:** 2007 July 20 **FILE NAME:** 06024-A7.2.dwg\A7.2 **DESCRIPTION:** WALL SECTIONS