SHEET: COW-A1 (05/2005)

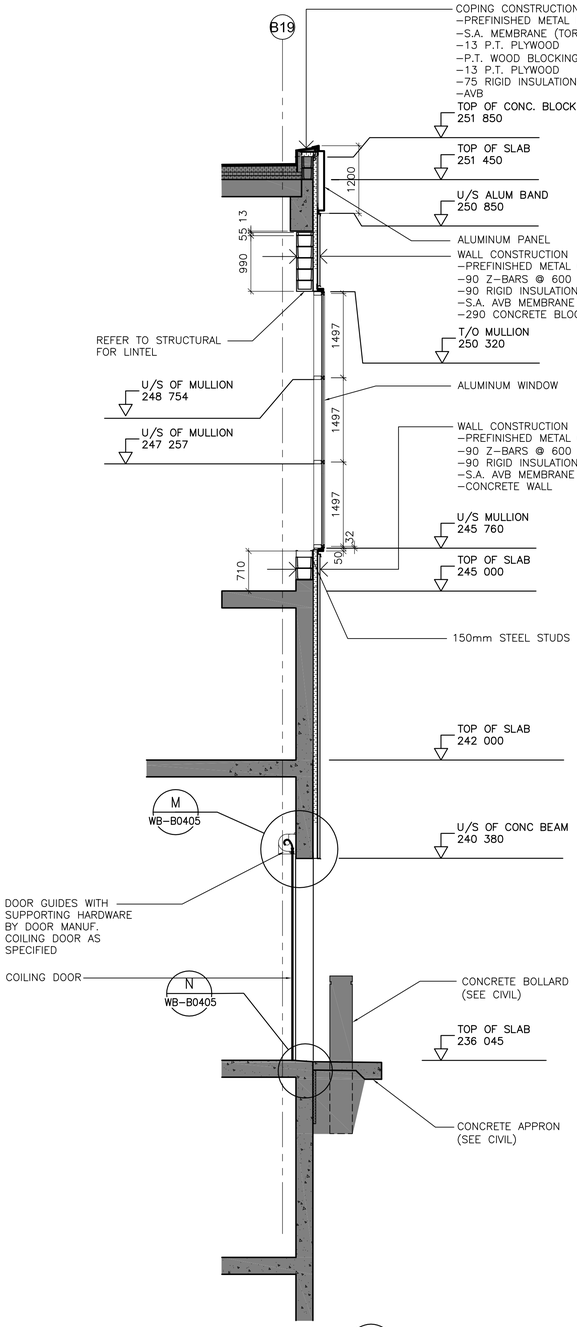

7 WB–B0205 WALL SECTION 1 : 50

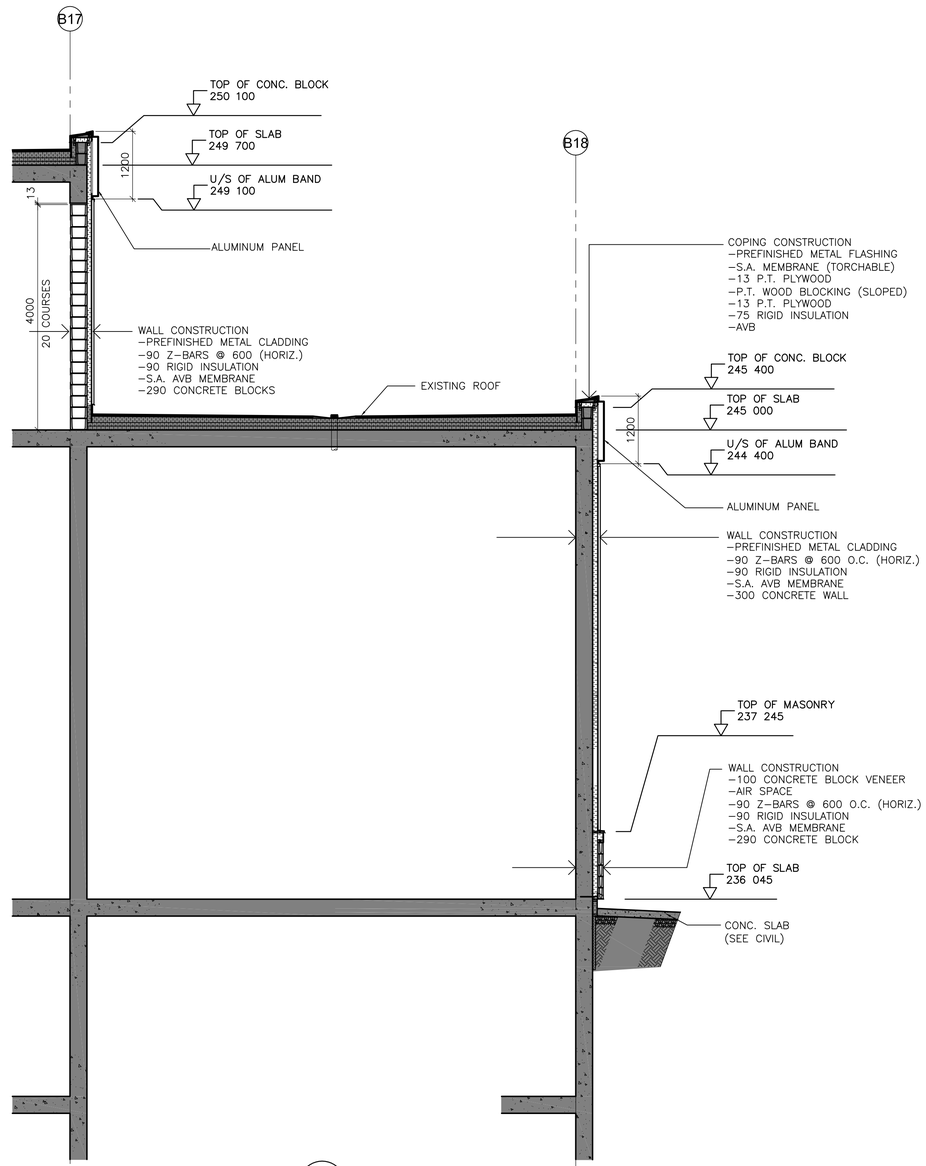

8 WB–B0204 WALL SECTION 1 : 50

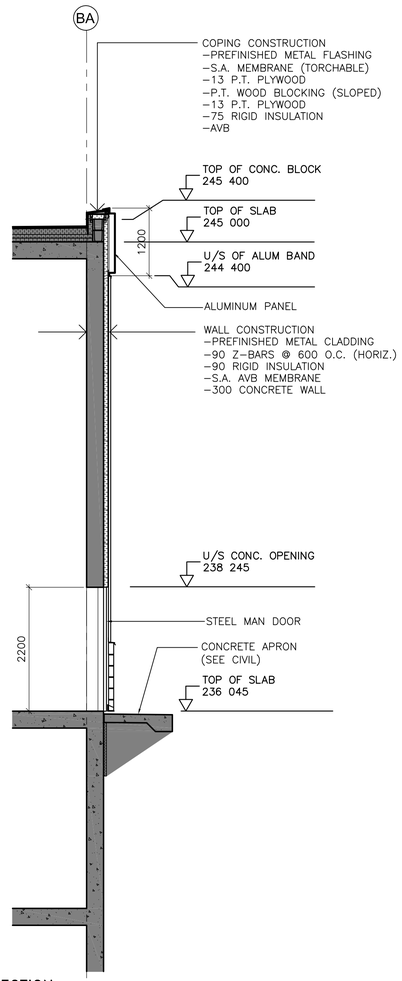

9 WB–B0110 WALL SECTION 1 : 50

PROVINCE OF MANITOBA
NEIL COOPER ARCHITECT INC.
№090
APPROVED ARCHITECTURAL CORPORATION

B.M.
ELEV.

NO.	REVISIONS	DATE	BY
00	ISSUED FOR TENDER	07/03/19	LK

CH2MHILL
Fredericksen Cooper ARCHITECTS
EarthTech A Tyco International Ltd. Company

DESIGNED BY	NC	CHECKED BY	LK
DRAWN BY	AL	APPROVED BY	AHL
SCALE:	AS SHOWN	RELEASED FOR CONSTRUCTION BY:	R. SOROKOWSKI
DATE	2005/11/28	DATE	2007/03/19

ENGINEER'S SEAL
ORIGINAL SIGNED BY
NEIL COOPER
2007/03/19

CONSULTANT DRAWING NO.
WB–B0252

Winnipeg
THE CITY OF WINNIPEG
WATER AND WASTE DEPARTMENT
ENGINEERING DIVISION

WATER TREATMENT PLANT
MAIN BUILDING
BUILDING ENVELOPE

ARCHITECTURAL
WALL SECTIONS

CITY FILE NUMBER
SHEET OF
CITY DRAWING NUMBER
1–0601B–A–B0252–001–00D

Last Save: 2007–03–19 12:32 PM

\\FCA–S\DATA\NC\JOBDATA\2004\04018 WINNIPEG WATER TREATMENT\02A–CAD\WTP\CONT DWGS\FCA\WALL SECTIONS–TRACTUS\07–03–12 793 ADDENDUM 1\DN_WB–B0252_FC.DWG