SHEET: COW-A1 (05/2005)

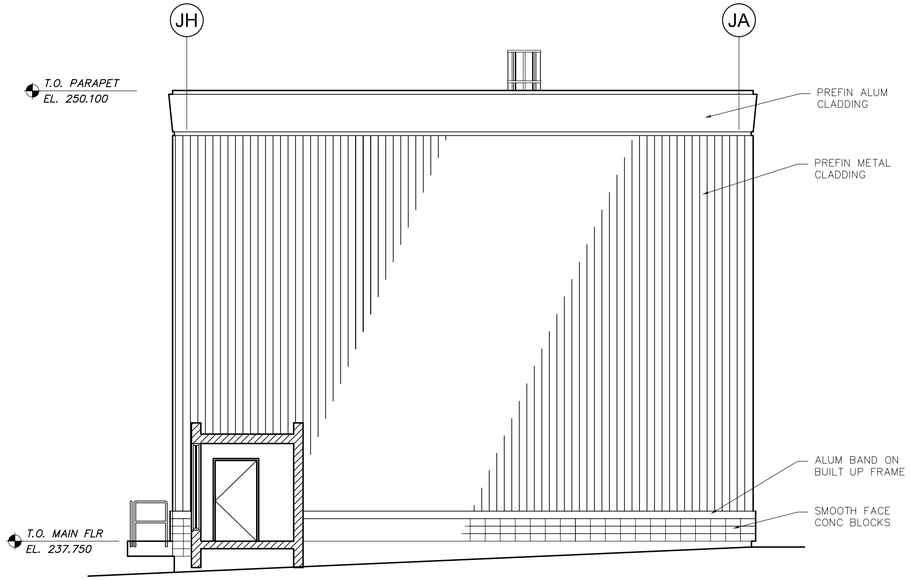

1 WJ-B0302 EAST ELEVATION
1:75

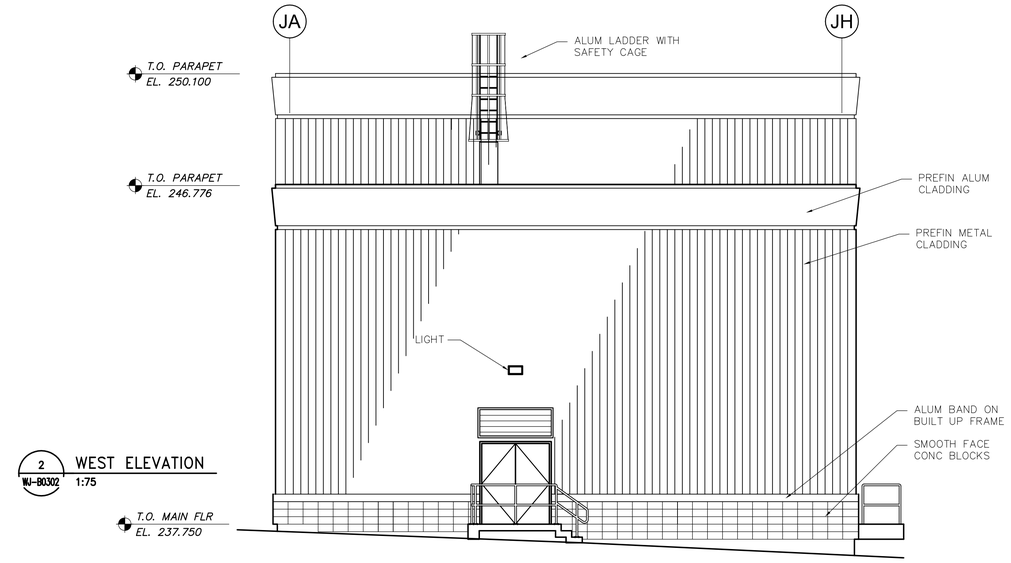

2 WJ-B0302 WEST ELEVATION
1:75

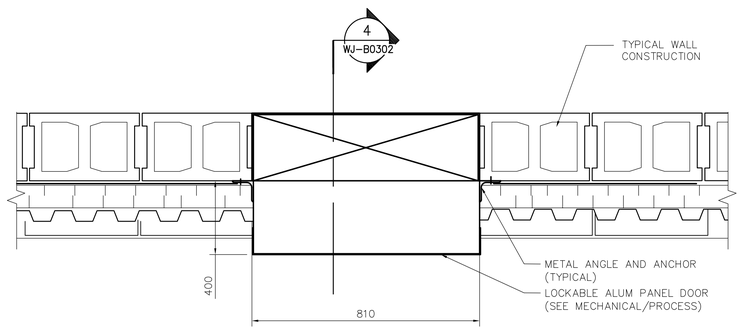

3 WJ-B0302 PLAN DETAIL OF LOADING CABINETS
1:10

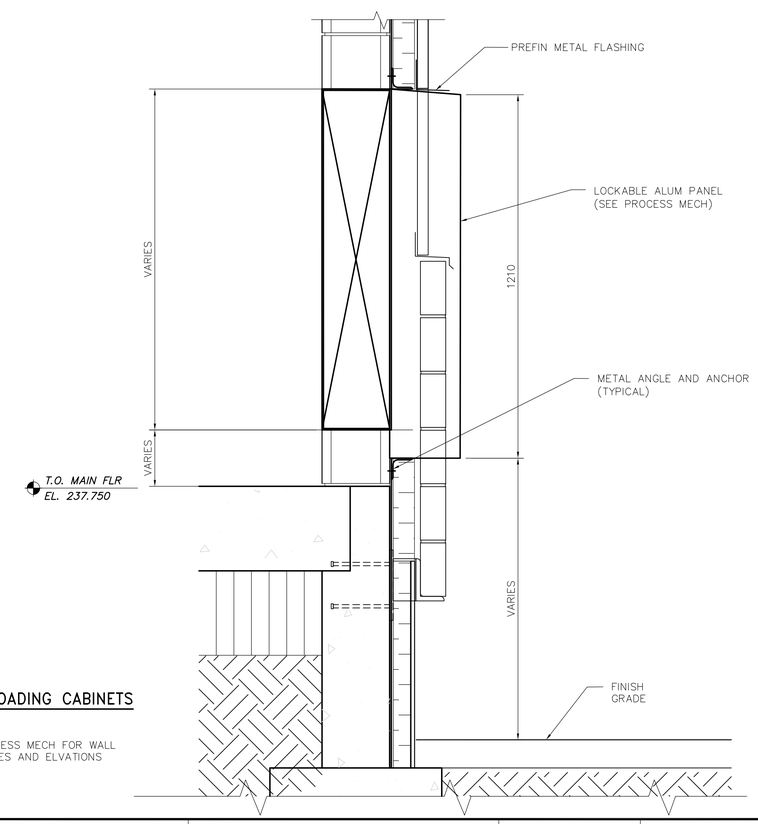

4 WJ-B0302 SECTION OF LOADING CABINETS
1:10

NOTE: VERIFY PROCESS MECH FOR WALL OPENING SIZES AND ELVATIONS

PROVINCE OF MANITOBA
NEIL COOPER ARCHITECT INC.
No.090
APPROVED ARCHITECTURAL CORPORATION

B.M.
ELEV.

NO.	REVISIONS	DATE	BY
00	ISSUED FOR TENDER	07/01/31	AL

CH2MHILL
Frederickson Cooper ARCHITECTS
EarthTech A Tyco International Ltd. Company

DESIGNED BY	NC	CHECKED BY	LK
DRAWN BY	AL	APPROVED BY	AHL
SCALE:	AS SHOWN	RELEASED FOR CONSTRUCTION BY:	R. SOROKOWSKI
DATE	2006/09/01	DATE	2007/01/31

ENGINEER'S SEAL
ORIGINAL SIGNED BY
NEIL COOPER
2007/01/31

CONSULTANT DRAWING NO.
WJ-B0302

Winnipeg
THE CITY OF WINNIPEG
WATER AND WASTE DEPARTMENT
ENGINEERING DIVISION

WATER TREATMENT PLANT
SODIUM HYPOCHLORITE GENERATION BUILDING
SODIUM HYPOCHLORITE AND CHEMICAL STORAGE BUILDING

ARCHITECTURAL
BUILDING ELEVATIONS AND DETAILS

CITY FILE NUMBER
SHEET OF
CITY DRAWING NUMBER
1-0601J-A-B0302-001-00D

Last Save: 2007-02-21 3:11 PM

E:\NC\JOBDATA\2004\04018 WINNIPEG WATER TREATMENT\02A-CAD\HYPOCHLORITE BLDG\ARCH DWGS\07-02-21 ORIGINAL SIGNED\DN_WJ-B0302_FC.DWG