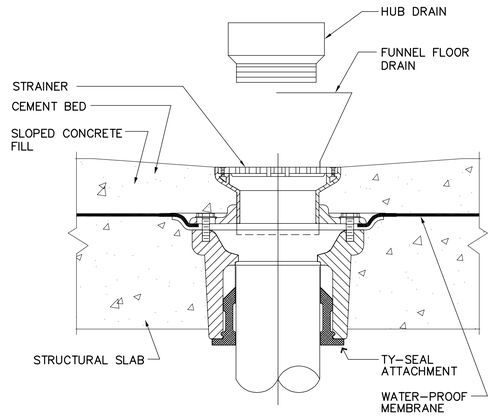

1 M7.02 FLOOR DRAIN DETAIL
SCALE N.T.S.

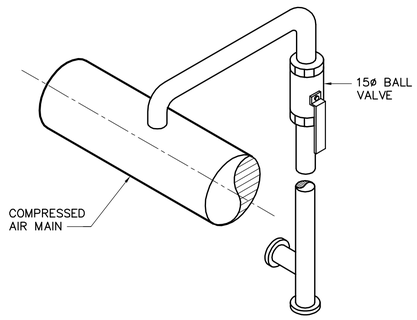

2 M7.02 COMPRESSED AIR TAKE-OFF DETAIL
SCALE N.T.S.

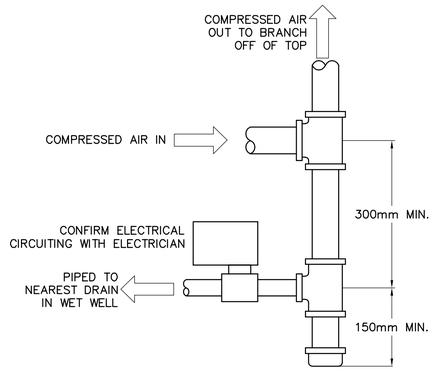

3 M7.02 COMPRESSED AIR DRIP LEG DETAIL
SCALE N.T.S.

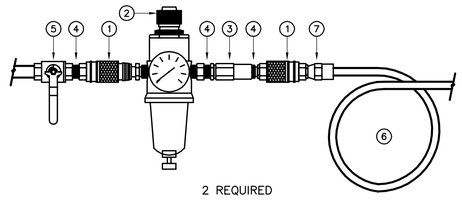

DETAIL DRAWING NOTES:

1. 'ARO' FULL BORE AIR LINE COUPLER AND CONNECTOR, 6mm
2. 'ARO' CHALLENGER 129221-022 COMBINATION FILTER/REGULATOR, 6mm
3. 'ARO' FLOW CHECK
4. PIPE NIPPLE
5. NEW 15mm BALL VALVE
6. OWNER SUPPLIED AIR HOSE
7. CONNECTOR TO MATCH HOSE

4 M7.02 COMPRESSED AIR CONNECTION DETAIL UV DISINFECTION AREA
SCALE N.T.S.

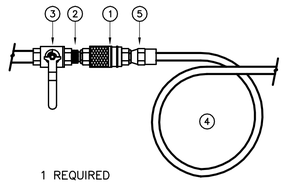

DETAIL DRAWING NOTES:

1. 'ARO' FULL BORE AIR LINE COUPLER AND CONNECTOR, 6mm
2. PIPE NIPPLE
3. NEW 15mm BALL VALVE
4. OWNER SUPPLIED AIR HOSE
5. CONNECTOR TO MATCH HOSE

5 M7.02 COMPRESSED AIR CONNECTION DETAIL EFFLUENT SAMPLING BUILDING
SCALE N.T.S.

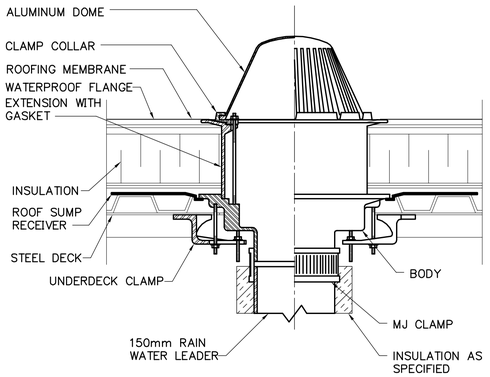

6 M7.02 ROOF DRAIN DETAIL
SCALE N.T.S.

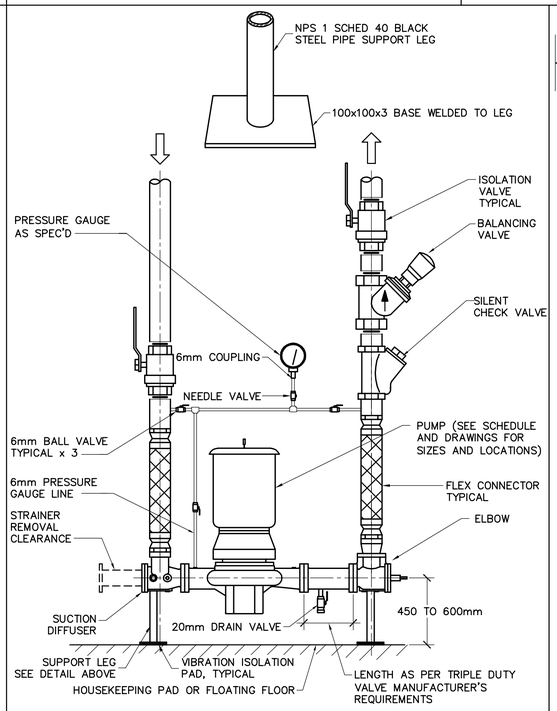

7 M7.02 VERTICAL INLINE/ CLOSED COUPLED PUMP DETAIL
SCALE N.T.S.

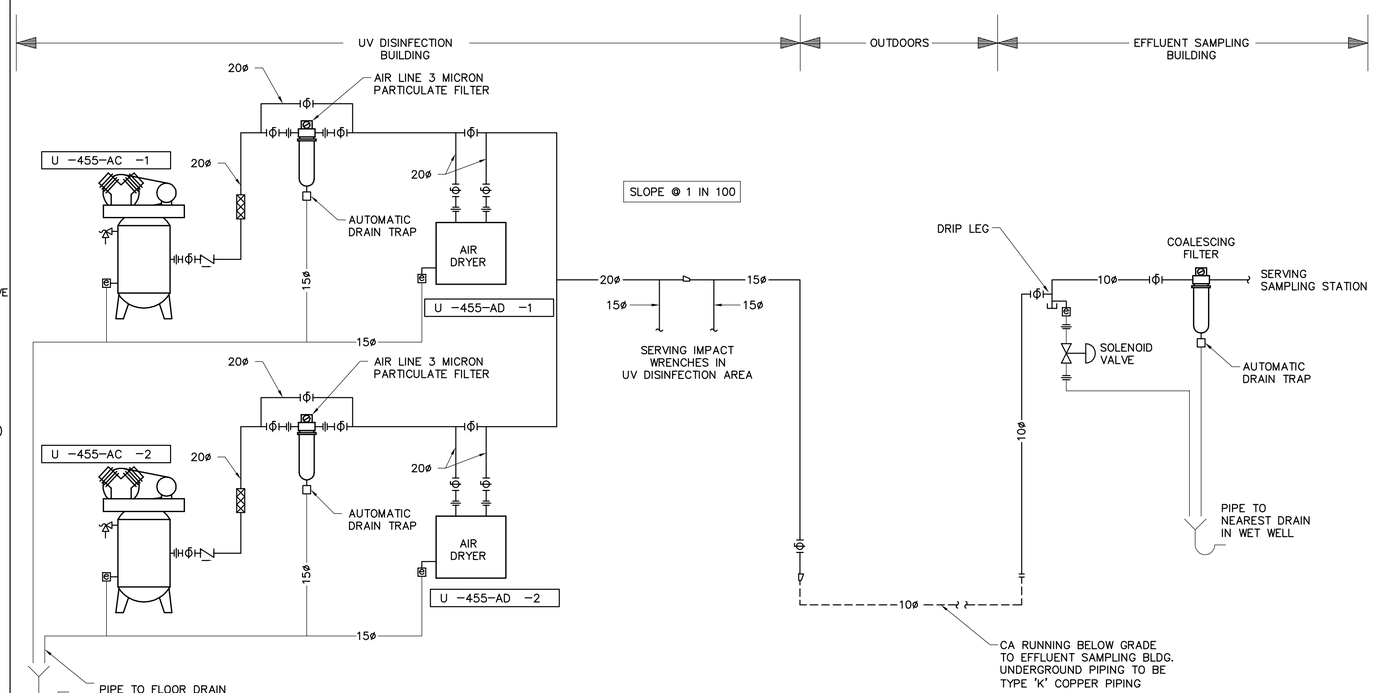

8 M7.02 COMPRESSED AIR SCHEMATIC
SCALE N.T.S.

APEGM
Certificate of Authorization
Earth Tech Canada Inc.
No. 730 Expiry: April 30, 2005

B.M.
ELEV.

NO.	REVISIONS	DATE	BY
0	ISSUED FOR TENDER	05/02/18	JEH

EARTH TECH
Earth Tech (Canada) Inc. Winnipeg, Manitoba 204.477.5381

DESIGNED BY	PL	CHECKED BY	AMA
DRAWN BY	DL	APPROVED BY	DT
HOR. SCALE:	AS NOTED	RELEASED FOR CONSTRUCTION BY:	T. KJARTANSON
VERTICAL SCALE:	AS NOTED		
DATE	2005/01/04	DATE	2005-02-18

ENGINEER'S SEAL
ORIGINAL SIGNED BY
P.V. LAITINEN
FEB. 18/05

CONSULTANT DRAWING NO.
66303D-CM7.02

Winnipeg
THE CITY OF WINNIPEG
WATER AND WASTE DEPARTMENT

NEWPCC - SECONDARY EFFLUENT UV DISINFECTION FACILITY

MECHANICAL
PLUMBING DETAILS AND SCHEMATICS
SHEET 2 OF 2

CITY FILE NUMBER
SHEET 11 OF 18
CITY DRAWING NUMBER

SHEET: CW-A1-WND (11/2002)