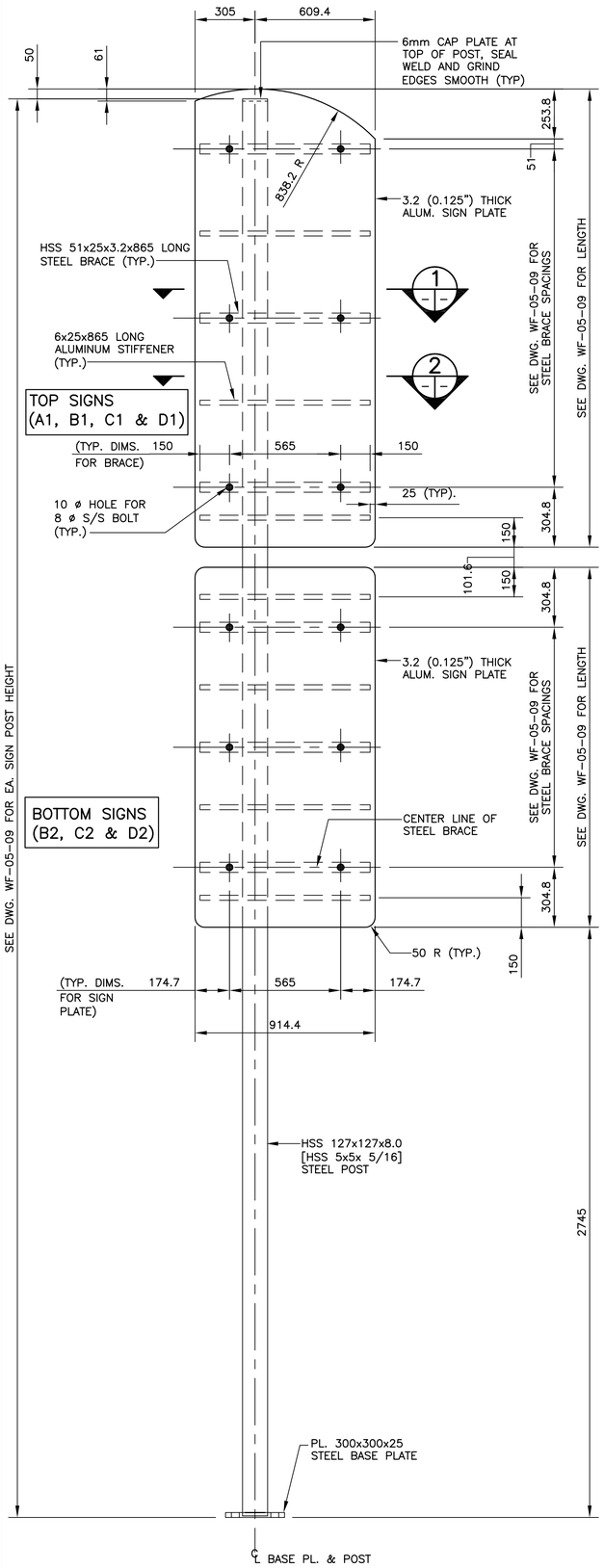

RHS POST ELEVATION
1: 15 (LHS ELEVATION IS OPPOSITE HAND)

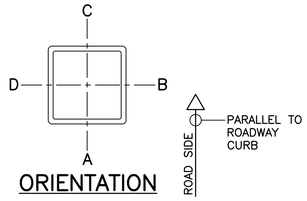

ORIENTATION

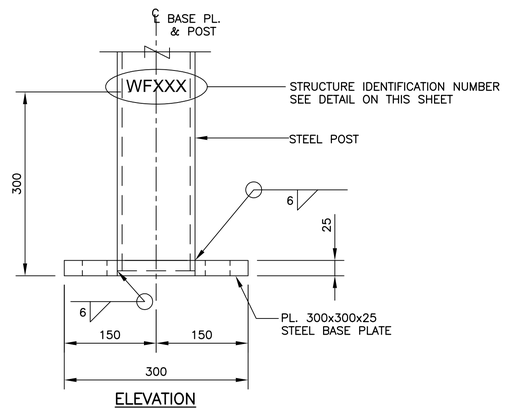

ELEVATION

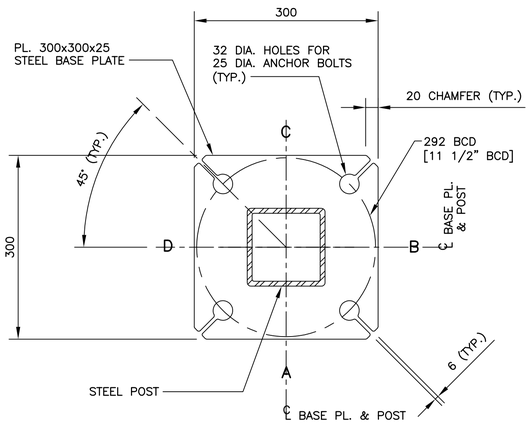

PLAN

BASE PLATE DETAIL
1: 5

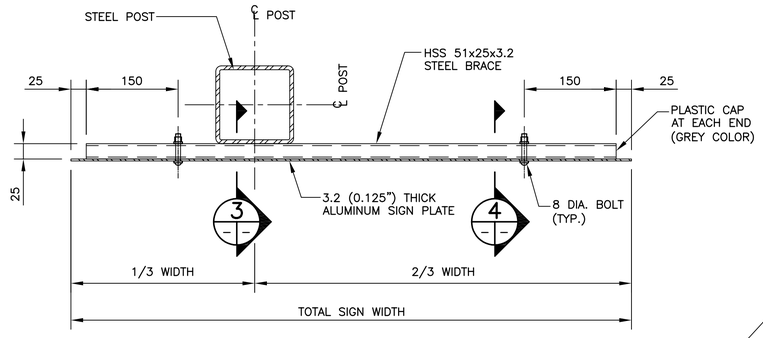

SECTION 1
1: 5

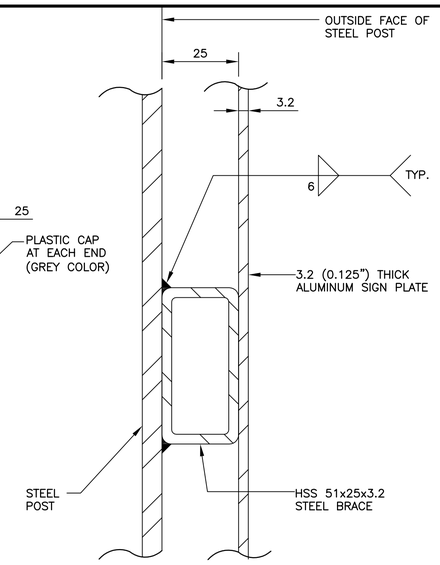

SECTION 3
1: 1

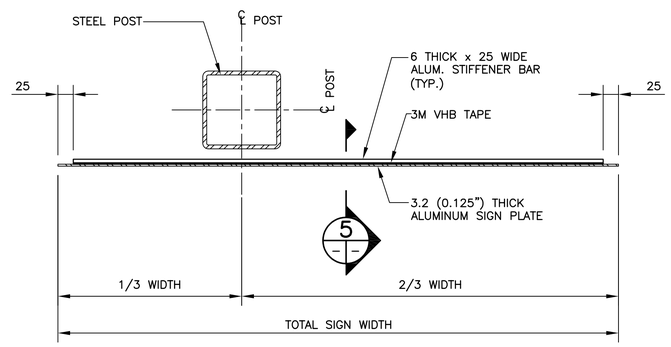

SECTION 2
1: 5

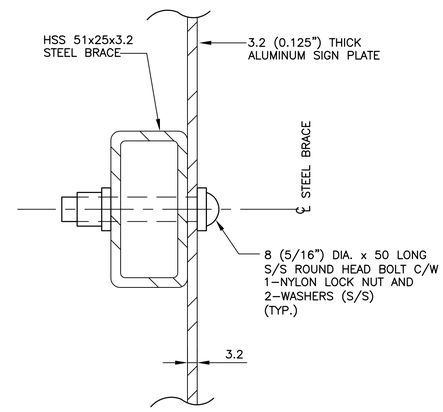

SECTION 4
1: 1

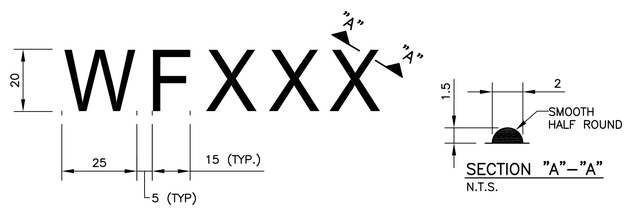

SECTION "A"-"A"
N.T.S.

STRUCTURE IDENTIFICATION NUMBER SIZE
1: 1

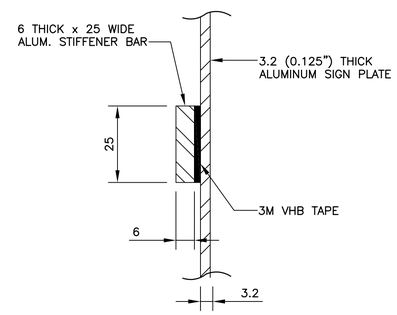

SECTION 5
1: 1

NOTES

1. SIGN PLATE: GAUGE NO. 10 SHEET ALUMINUM, 3.2MM (0.125 IN.) THICK CONFORMING TO ASTM B209M.
2. BOLTS & SCREWS: ASTM A276, TYPE 316.

DRAWING REDUCED NOT TO SCALE

B.M. ELEV.				DESIGNED BY	S.S.R./A.S.D.	DILLON CONSULTING	ENGINEER'S SEAL	THE CITY OF WINNIPEG PUBLIC WORKS DEPARTMENT	
				DRAWN BY	N.B.G.		PROVINCE OF MANITOBA S.S. RIHAL REGISTERED PROFESSIONAL ENGINEER	WAYFINDER SIGN SYSTEM	CITY DRAWING NUMBER WF-05-10
				CHECKED BY	S.S.R.				SHEET 10 OF 10
				APPROVED BY					
				HOR. SCALE	AS SHOWN			ALTERNATIVE 2 (SIGN PLATES) SIGN PLATE AND POST DETAILS	
				VERTICAL		RELEASED FOR CONSTRUCTION	CONSULTANT PROJECT NO. 05-4794-1000		
NO.	REVISIONS	DATE	BY	DATE	JUNE 2005	DATE			