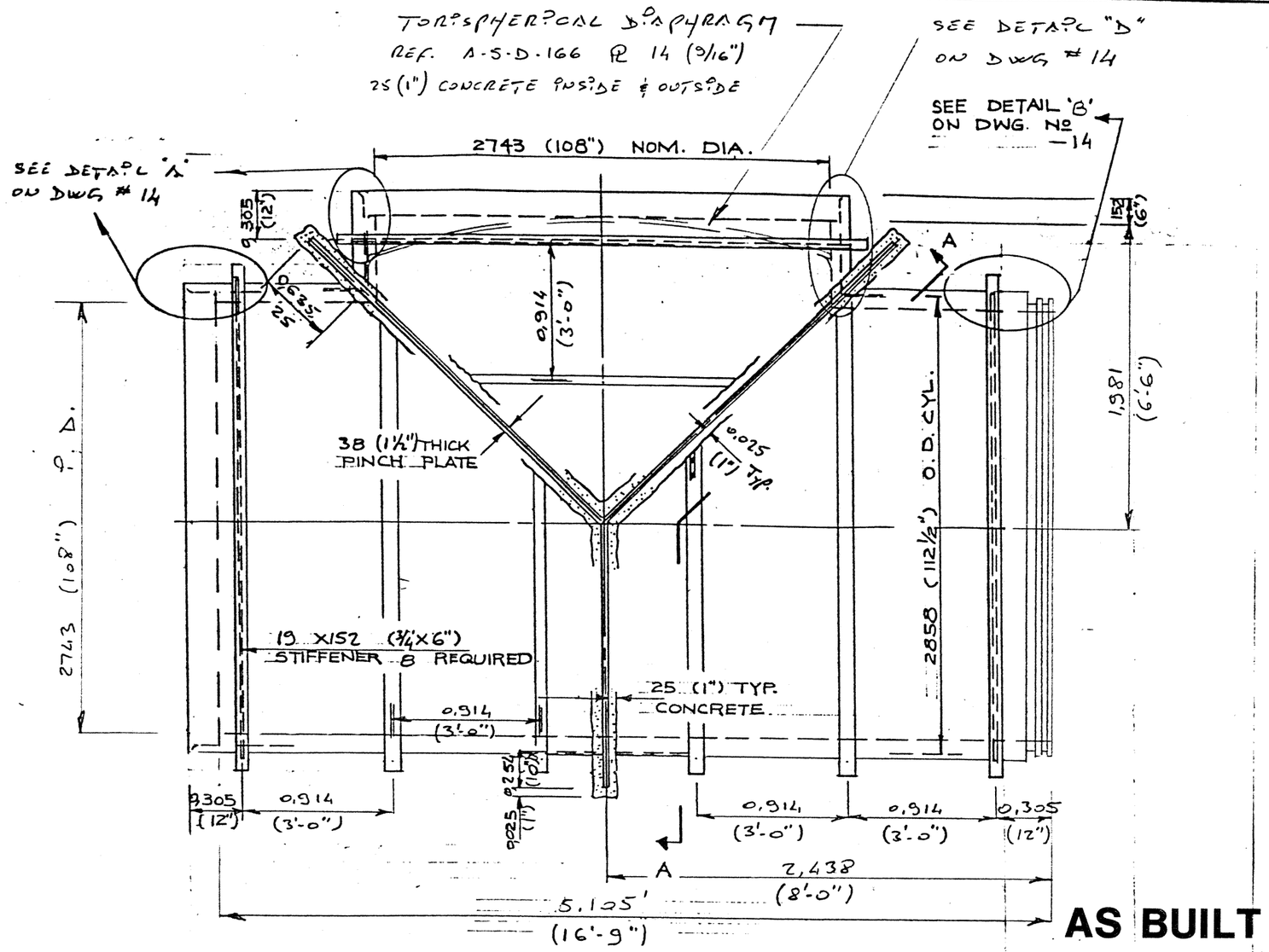

AS BUILT

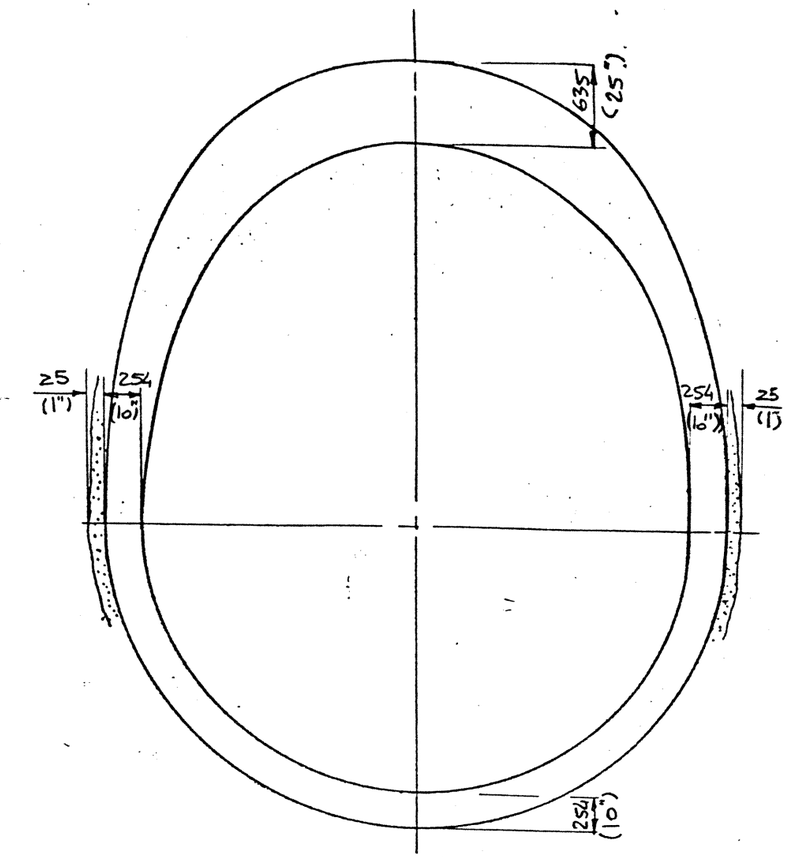

VIEW A-A
DETAIL OF PINCH PLATE.

USE TYPE V CEMENT
INSIDE & OUTSIDE

P_w = 120 kPa
P_t = 168 kPa

SPECIFICATION	: AWWA C301 (E)
TYPE	: 'A'
CLASS/PRESSURE	: 120 kPa (17.2 PSI)
PLATE THICKNESS	: 12.7 (½") PL
(2 X 4 12/12 @ ⅜") — WIRE MESH — INSIDE	: 51 X 102 2.7/2.7 @ 9.5
(2 X 8 0/6 @ ¾") — OUTSIDE	: 51 X 203 7.8/4.9 @ 19
WALL THICKNESS	: 95 (3¾")

- PLACE 2x4 12/12 WIRE MESH AROUND STIFFENERS
- USE STEEL SPIDERS AT PIPE END TO KEEP PIPE ROUND

REV.	DATE:	RECORD OF CHANGE	BY:
B	MAR 29.79	REVISED TENDER NUMBER	G.L.
A	MAR 8,79	GENERAL REVISION	G.L.

This drawing and all technical information appearing hereon are the property of CANRON INC. and must be kept in confidence by the recipient. The same may not be used or reproduced either in whole or in part without the express consent of CANRON INC., which reserves all rights of copyright.

CANRON INC. PIPE DIVISION

MICROFILMED NOV -- 1981

CITY OF WINNIPEG.
DETAIL OF MK. No: 66

10819-2D-44B
F-1575
44 OF 62

Scale: N.T.S.		Date: 22 AUG. 1978		
Drawn by: K.T.	Checked by:	Approved by:	Drawing No.	Rev.