A1 SIZE – 594mm x 841mm

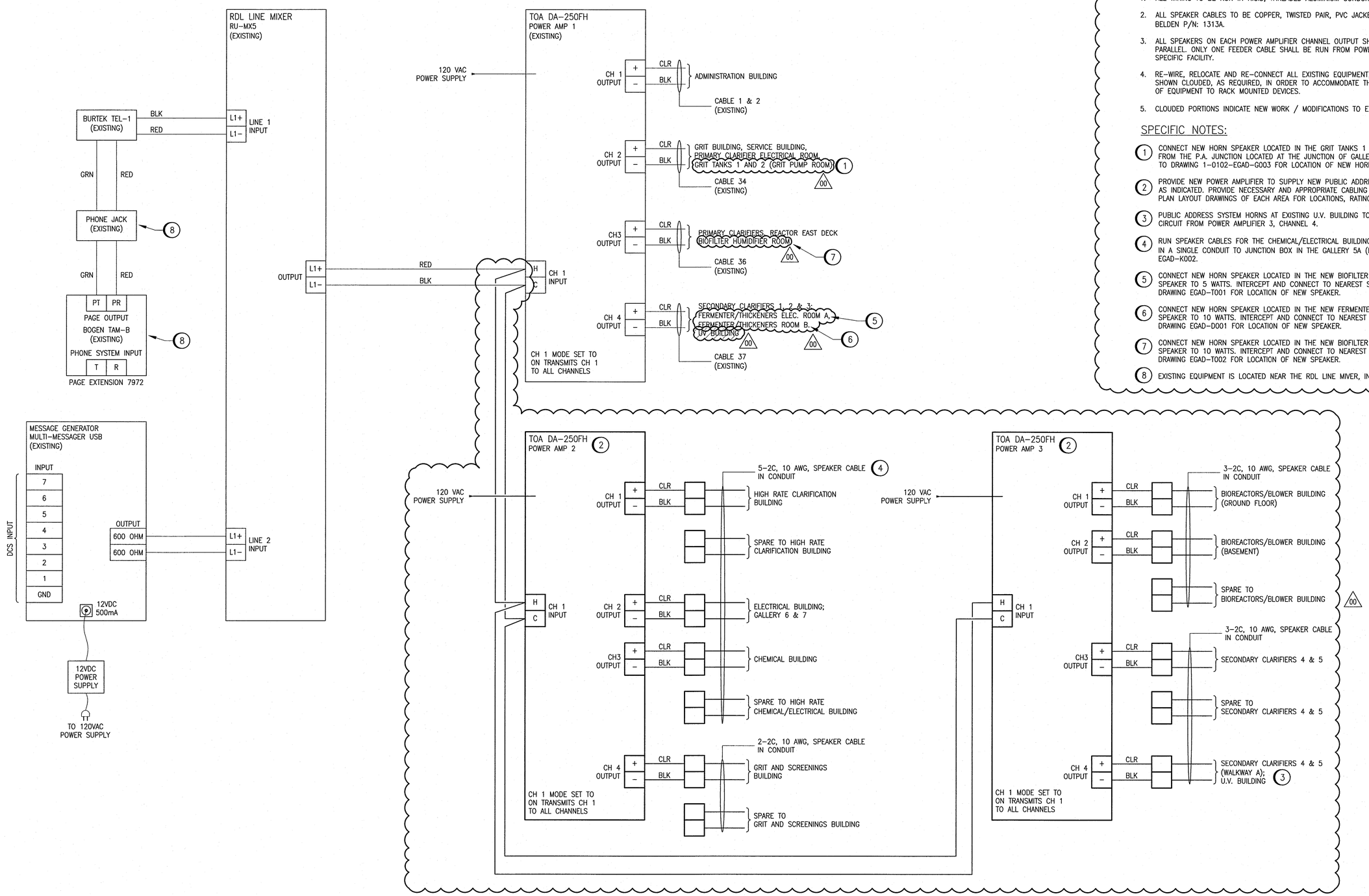

00

GENERAL NOTES:

1. ALL WIRING TO BE RUN IN RIGID, THREADED ALUMINIUM CONDUIT.
2. ALL SPEAKER CABLES TO BE COPPER, TWISTED PAIR, PVC JACKET EQUIVALENT TO BELDEN P/N: 1313A.
3. ALL SPEAKERS ON EACH POWER AMPLIFIER CHANNEL OUTPUT SHALL BE CONNECTED IN PARALLEL. ONLY ONE FEEDER CABLE SHALL BE RUN FROM POWER AMPLIFIER TO THE SPECIFIC FACILITY.
4. RE-WIRE, RELOCATE AND RE-CONNECT ALL EXISTING EQUIPMENT, EVEN THOUGH NOT SHOWN CLOUDED, AS REQUIRED, IN ORDER TO ACCOMMODATE THE NEW ORIENTATION OF EQUIPMENT TO RACK MOUNTED DEVICES.
5. CLOUDED PORTIONS INDICATE NEW WORK / MODIFICATIONS TO EXISTING EQUIPMENT.

SPECIFIC NOTES:

1. CONNECT NEW HORN SPEAKER LOCATED IN THE GRIT TANKS 1 & 2 AREA (GRIT PUMP ROOM G-B01) FROM THE P.A. JUNCTION LOCATED AT THE JUNCTION OF GALLERY 1 G113 AND GALLERY 3 P104. REFER TO DRAWING 1-0102-EGAD-G003 FOR LOCATION OF NEW HORN SPEAKER AND P.A. JUNCTION BOX.
2. PROVIDE NEW POWER AMPLIFIER TO SUPPLY NEW PUBLIC ADDRESS SYSTEM DEVICES IN NEW BUILDINGS AS INDICATED. PROVIDE NECESSARY AND APPROPRIATE CABLING INTO AMPLIFIER. REFER TO ELECTRICAL PLAN LAYOUT DRAWINGS OF EACH AREA FOR LOCATIONS, RATINGS, AND QUANTITY OF SPEAKERS.
3. PUBLIC ADDRESS SYSTEM HORNS AT EXISTING U.V. BUILDING TO BE REWIRED AND CONNECTED TO A NEW CIRCUIT FROM POWER AMPLIFIER 3, CHANNEL 4.
4. RUN SPEAKER CABLES FOR THE CHEMICAL/ELECTRICAL BUILDING AND HIGH RATE CLARIFICATION BUILDING IN A SINGLE CONDUIT TO JUNCTION BOX IN THE GALLERY 5A (RM B-K02). REFER TO DRAWING EGAD-K002.
5. CONNECT NEW HORN SPEAKER LOCATED IN THE NEW BIOFILTER ELECTRICAL ROOM. DIAL SETTING OF SPEAKER TO 5 WATTS. INTERCEPT AND CONNECT TO NEAREST SUITABLE CONNECTION POINT. REFER TO DRAWING EGAD-T001 FOR LOCATION OF NEW SPEAKER.
6. CONNECT NEW HORN SPEAKER LOCATED IN THE NEW FERMENTER ELECTRICAL ROOM. DIAL SETTING OF SPEAKER TO 10 WATTS. INTERCEPT AND CONNECT TO NEAREST SUITABLE CONNECTION POINT. REFER TO DRAWING EGAD-D001 FOR LOCATION OF NEW SPEAKER.
7. CONNECT NEW HORN SPEAKER LOCATED IN THE NEW BIOFILTER HUMIDIFIER ROOM. DIAL SETTING OF SPEAKER TO 10 WATTS. INTERCEPT AND CONNECT TO NEAREST SUITABLE CONNECTION POINT. REFER TO DRAWING EGAD-T002 FOR LOCATION OF NEW SPEAKER.
8. EXISTING EQUIPMENT IS LOCATED NEAR THE RDL LINE MIVER, IN THE ADMIN ELECTRICAL ROOM.

REFERENCE DRAWINGS	DESCRIPTION
1-0102-ECBD-A001	PUBLIC ADDRESS SYSTEM, EQUIPMENT RACK LAYOUT

APEGM
Certificate of Authorization
SNC-Lavalin Inc.
No. 4489

NO.	REVISIONS	DATE	DESIGN	CHECK
00	ISSUED FOR CONSTRUCTION – 976-2016	2017/04/05	WE	DEB

CH2MHILL.
SNC·LAVALIN
KGS GROUP CONSULTING ENGINEERS

DESIGNED BY: V. ELIMBAN	CHECKED BY: E. RYCZKOWSKI
DRAWN BY: MJ. PERSSON	APPROVED BY: D. BECKER
SCALE: NTS	ISSUED FOR CONSTRUCTION BY: J. SHUMKA
DATE: 2015/04/27	DATE: 2017/04/05
CONSULTANT NO.: 474248	

ENGINEER'S SEAL
PROVINCE OF MANITOBA
D.E. BECKER
Member
23646
REGISTERED PROFESSIONAL ENGINEER
April 5 2017

Winnipeg
THE CITY OF WINNIPEG
WATER AND WASTE DEPARTMENT

SOUTH END WATER POLLUTION CONTROL CENTRE
SEWPCC UPGRADING/EXPANSION PROJECT
ELECTRICAL
PUBLIC ADDRESS SYSTEM
WIRING DIAGRAM

CITY DRAWING NUMBER	SHEET	REV.	SIZE
1-0102-EWDG-A001	001	00	A1

PLOT DATE: Mar 30, 2017 – 12:54pm
FILE NAME: 1-0102-EWDG-A001.dwg

LAST SAVE: 2017/03/30 – 12:54pm
PATH: C:\pw_workdir\ch2mhill_wbg\ve006717\d0355952\1-0102-EWDG-A001.dwg