A1 SIZE – 594mm x 841mm

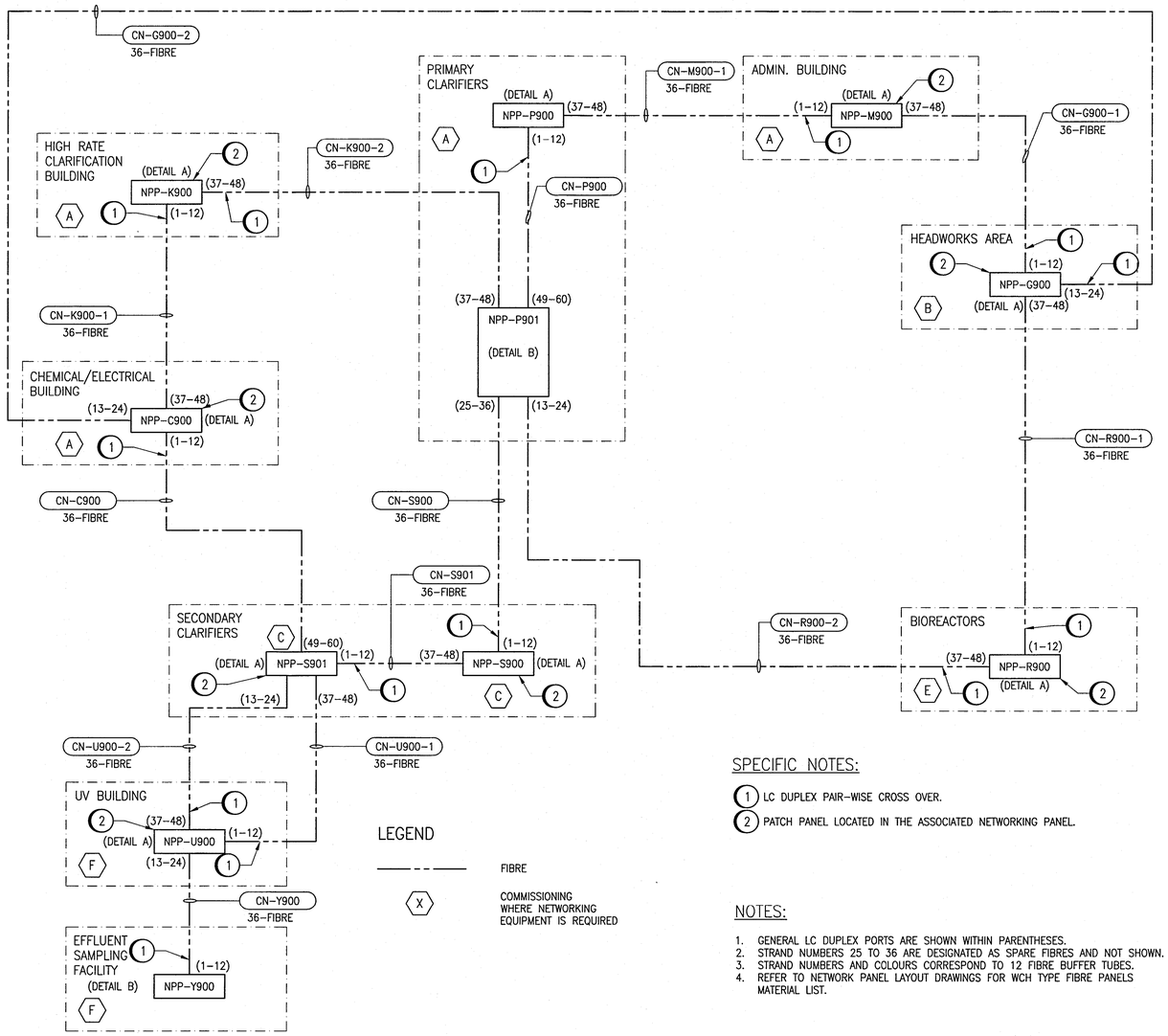

LEGEND

FIBRE

COMMISSIONING WHERE NETWORKING EQUIPMENT IS REQUIRED

SPECIFIC NOTES:

1. LC DUPLEX PAIR-WISE CROSS OVER.
2. PATCH PANEL LOCATED IN THE ASSOCIATED NETWORKING PANEL.

NOTES:

1. GENERAL LC DUPLEX PORTS ARE SHOWN WITHIN PARENTHESES.
2. STRAND NUMBERS 25 TO 36 ARE DESIGNATED AS SPARE FIBRES AND NOT SHOWN.
3. STRAND NUMBERS AND COLOURS CORRESPOND TO 12 FIBRE BUFFER TUBES.
4. REFER TO NETWORK PANEL LAYOUT DRAWINGS FOR WCH TYPE FIBRE PANELS MATERIAL LIST.

BLUE BUFFER TUBE – STRAND NUMBERS & COLOURS

CABLE	FROM	TO	1	2	3	4	5	6	7	8	9	10	11	12
			BLUE	ORANGE	GREEN	BROWN	SLATE	WHITE	RED	BLACK	YELLOW	VIOLET	ROSE	AQUA
CN-G900-1	NPP-M900 (37-42)	NPP-G900 (1-6)	H.E.TX	H.E.RX	CP.E.TX	CP.E.RX	CS.E.TX	CS.E.RX	F	F	F	F	F	F
CN-G900-2	NPP-C900 (13-18)	NPP-G900 (13-18)	F	F	F	F	F	F	H.NC.TX	H.NC.RX	CP.NC.TX	CP.NC.RX	CS.NC.TX	CS.NC.RX
CN-R900-1	NPP-G900 (37-42)	NPP-R900 (1-6)	H.E.TX	H.E.RX	CP.E.TX	CP.E.RX	CS.E.TX	CS.E.RX	F	F	F	F	F	F
CN-R900-2	NPP-P901 (13-18)	NPP-R900 (37-42)	H.E.TX	H.E.RX	CP.E.TX	CP.E.RX	CS.E.TX	CS.E.RX	H.SC.TX	H.SC.RX	CP.SC.TX	CP.SC.RX	CS.SC.TX	CS.SC.RX
CN-S900	NPP-P901 (25-30)	NPP-S900 (1-6)	H.W.TX	H.W.RX	CP.W.TX	CP.W.RX	CS.W.TX	CS.W.RX	H.SC.TX	H.SC.RX	CP.SC.TX	CP.SC.RX	CS.SC.TX	CS.SC.RX
CN-S901	NPP-S900 (37-42)	NPP-S901 (1-6)	H.W.TX	H.W.RX	CP.W.TX	CP.W.RX	CS.W.TX	CS.W.RX	F	F	F	F	F	F
CN-U900-1	NPP-S901 (37-42)	NPP-U900 (1-6)	H.W.TX	H.W.RX	CP.W.TX	CP.W.RX	CS.W.TX	CS.W.RX	F	F	F	F	F	F
CN-U900-2	NPP-S901 (13-18)	NPP-U900 (37-42)	H.W.TX	H.W.RX	CP.W.TX	CP.W.RX	CS.W.TX	CS.W.RX	F	F	F	F	F	F
CN-C900	NPP-S901 (49-54)	NPP-C900 (1-6)	H.W.TX	H.W.RX	CP.W.TX	CP.W.RX	CS.W.TX	CS.W.RX	F	F	F	F	F	F
CN-K900-1	NPP-C900 (37-42)	NPP-K900 (1-6)	H.W.TX	H.W.RX	CP.W.TX	CP.W.RX	CS.W.TX	CS.W.RX	F	F	F	F	F	F
CN-K900-2	NPP-P901 (37-42)	NPP-K900 (37-42)	H.W.TX	H.W.RX	CP.W.TX	CP.W.RX	CS.W.TX	CS.W.RX	F	F	F	F	F	F
CN-P900	NPP-P901 (49-54)	NPP-P900 (1-6)	H.E.TX	H.E.RX	CP.E.TX	CP.E.RX	CS.E.TX	CS.E.RX	F	F	F	F	F	F
CN-M900-1	NPP-P900 (37-42)	NPP-M900 (1-6)	H.E.TX	H.E.RX	CP.E.TX	CP.E.RX	CS.E..TX	CS.E.RX	F	F	F	F	F	F
CN-Y900	NPP-U900 (13-18)	NPP-Y900 (1-6)	F	F	CP.TX	CP.RX	F	F	F	F	F	F	F	F

ORANGE BUFFER TUBE – STRAND NUMBERS & COLOURS

CABLE	FROM	TO	13	14	15	16	17	18	19	20	21	22	23	24
			BLUE	ORANGE	GREEN	BROWN	SLATE	WHITE	RED	BLACK	YELLOW	VIOLET	ROSE	AQUA
CN-G900-1	NPP-M900 (43-48)	NPP-G900 (7-12)	V.TX	V.RX	F	F	F	F	F	F	A.E.TX	A.E.RX	S.E.TX	S.E.RX
CN-G900-2	NPP-C900 (19-24)	NPP-G900 (19-24)	F	F	F	F	A.NC.TX	A.NC.RX	S.NC.TX	S.NC.RX	F	F	F	F
CN-R900-1	NPP-G900 (43-48)	NPP-R900 (7-12)	V.TX	V.RX	F	F	F	F	F	F	A.ETX	A.E.RX	S.E.TX	S.E.RX
CN-R900-2	NPP-P901 (19-24)	NPP-R900 (43-48)	V.TX	V.RX	F	F	A.SC.TX	A.SC.RX	S.SC.TX	S.SC.RX	A.E.TX	A.E.RX	S.E.TX	S.E.RX
CN-S900	NPP-P901 (31-36)	NPP-S900 (7-12)	F	F	F	F	A.SC.TX	A.SC.RX	S.SC.TX	S.SC.RX	A.W.TX	A.W.RX	S.W.TX	S.W.RX
CN-S901	NPP-S900 (43-48)	NPP-S901 (7-12)	F	F	F	F	F	F	F	F	A.W.TX	A.W.RX	S.W.TX	S.W.RX
CN-U900-1	NPP-S901 (43-48)	NPP-U900 (7-12)	F	F	RS.TX	RS.RX	F	F	F	F	A.W.TX	A.W.RX	S.W.TX	S.W.RX
CN-U900-2	NPP-S901 (19-24)	NPP-U900 (43-48)	CAP.TX	CAP.RX	RS.TX	RS.RX	F	F	F	F	A.W.TX	A.W.RX	S.W.TX	S.W.RX
CN-C900	NPP-S901 (55-60)	NPP-C900 (7-12)	CAP.TX	CAP.RX	F	F	F	F	F	F	A.W.TX	A.W.RX	S.W.TX	S.W.RX
CN-K900-1	NPP-C900 (43-48)	NPP-K900 (7-12)	F	F	F	F	F	F	F	F	A.W.TX	A.W.RX	S.W.TX	S.W.RX
CN-K900-2	NPP-P901 (43-48)	NPP-K900 (43-48)	F	F	F	F	F	F	F	F	A.W.TX	A.W.RX	S.W.TX	S.W.RX
CN-P900	NPP-P901 (55-60)	NPP-P900 (7-12)	V.TX	V.RX	F	F	F	F	F	F	A.E.TX	A.E.RX	S.E.TX	S.E.RX
CN-M900-1	NPP-P900 (43-48)	NPP-M900 (7-12)	V.TX	V.RX	F	F	F	F	F	F	A.E.TX	A.E.RX	S.E.TX	S.E.RX
CN-Y900	NPP-U900 (19-24)	NPP-Y900 (7-12)	CAP.TX	CAP.RX	F	F	F	F	F	F	F	F	F	F

CORNING
WCH-06P
INDUSTRIAL CONNECTOR HOUSING

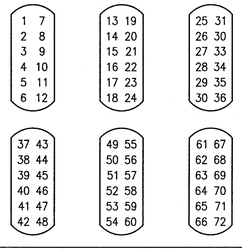

(A) WCH FIBRE PATCH PANEL PORT LAYOUT

STRAND ALLOCATION LEGEND

A – ADMINISTRATION NETWORK
CP – PRIMARY CONTROL NETWORK
CS – SECONDARY CONTROL NETWORK
H – SUPERVISORY NETWORK
F – FUTURE
S – SECURITY
V – SERVER NETWORK
E – EAST RING
W – WEST RING
RS – SECONDARY CLARIFIERS RIO NETWORK
CAP – CHEMICAL AREA PROFIBUS
NC – NORTH RING COUPLING
SC – SOUTH RING COUPLING

FUNCTION LEGEND (FROM THE PERSPECTIVE OF THE "TO" DEVICE)

TX – TRANSMIT
RX – RECEIVE

NPP-P901
CORNING
EDC-12P-NH

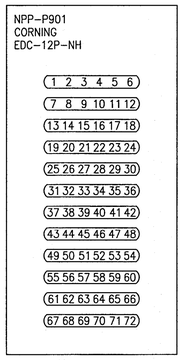

NPP-Y900
CORNING
EDC-6P-NH

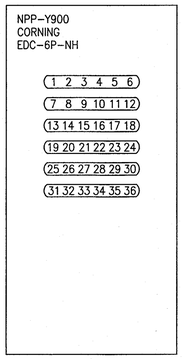

NPP-P901 AND NPP-Y900 BILL OF MATERIAL

ITEM	QTY NPP-P901	QTY NPP-Y900	DESCRIPTION	MANUFACTURER	CATALOG NUMBER
1	1	0	ENVIRONMENTAL DISTRIBUTION CENTER; ACCEPT 12 CCH CONNECTOR PANELS AND 12 TYPE 2S OR 6 TYPE 4S OR 6 TYPE 4A SPLICE TRAYS; NO CABLE ENTRY HOLE PROVIDED	CORNING	EDC-12P-NH
2	0	1	ENVIRONMENTAL DISTRIBUTION CENTER; ACCEPT 6 CCH CONNECTOR PANELS AND 6 TYPE 2S OR 3 TYPE 4S SPLICE TRAYS	CORNING	EDC-6P-NH
3	10	1	CLOSET CONNECTOR HOUSING (CCH) PANEL, PIGTAILED, LC DUPLEX, 12 F, 50 μm MULTIMODE (OM4), MIC FIBRE	CORNING	CCH-CP12-E4-P03SH
4	5	1	SPLICE TRAY, HEAT-SHRINK FUSION SPLICES, 24 F	CORNING	M67-078
5	AS REQ'D	AS REQ'D	LOW LOSS FIBRE OPTIC PATCH CORD, 2 FIBRES, LC DUPLEX TO LC DUPLEX, ZIPCORD TIGHT-BUFFERED CABLE, RISER WITH 2.0 mm LEGS, 50 μm MULTIMODE (OM3), 1 METER	CORNING	E050502T5120001M
6	AS REQ'D	AS REQ'D	FUSION SPLICER PROTECTOR, 60 mm LONG, HEAT SHRINK SLEEVE AND SS ROD	CORNING	2806031-01
7	AS REQ'D	AS REQ'D	NEMA 4 RATED CONDUIT FITTINGS FOR 2 INCH CONDUIT	CORNING	EDC-2N4-KIT

(B) EDC FIBRE PATCH PANEL PORT LAYOUT

REFERENCE DRAWINGS	DESCRIPTION
1-0102-ANET-A002	NETWORK ROUTING PLAN, FIBRE NETWORK
1-0102-ANET-A001	NETWORK BLOCK DIAGRAM, SUPERVISORY, CONTROL AND SERVER NETWORK OVERVIEW

APEGM Certificate of Authorization
SNC-Lavalin Inc.
No. 4489

NO.	REVISIONS	DATE	DESIGN	CHECK
00	ISSUED FOR CONSTRUCTION – 976-2016	2017/04/05	PC	TMC

CH2MHILL. SNC·LAVALIN KGS GROUP

DESIGNED BY: P. CHICATUN
CHECKED BY: T. CHURCH
DRAWN BY: M. WANG
APPROVED BY: E. RYCZKOWSKI
SCALE: NTS
ISSUED FOR CONSTRUCTION BY: J. SHUMKA
DATE: 2013/09/10
DATE: 2017/04/05
CONSULTANT NO.: 474248

ENGINEER'S SEAL
PROVINCE OF MANITOBA
CHICATUN
Member 30307
REGISTERED PROFESSIONAL ENGINEER
APR. 4, 2017
REV. 00

Winnipeg
THE CITY OF WINNIPEG
WATER AND WASTE DEPARTMENT

SOUTH END WATER POLLUTION CONTROL CENTRE
SEWPCC UPGRADING/EXPANSION PROJECT
AUTOMATION
FACILITY FIBRE ALLOCATION

CITY DRAWING NUMBER: 1-0102-ANET-A005 | SHEET 001 | REV. 00 | SIZE A1

LAST SAVE: 2017/04/01 – 4:02pm
PATH: C:\pw_workdir\ch2mhill_wbg\sh043264\d0356273\1-0102-ANET-A005.dwg

PLOT DATE: Apr 01, 2017 – 4:02pm
FILE NAME: 1-0102-ANET-A005.dwg