A1 SIZE – 594mm x 841mm

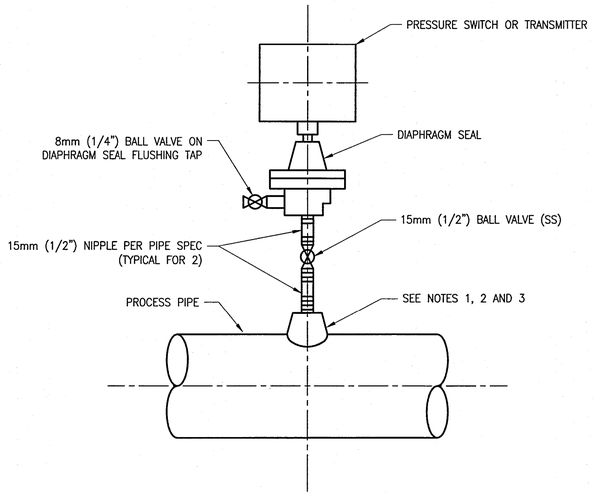

(A) DIAPHRAGM PRESSURE INSTRUMENT – PIPE MOUNT
NTS

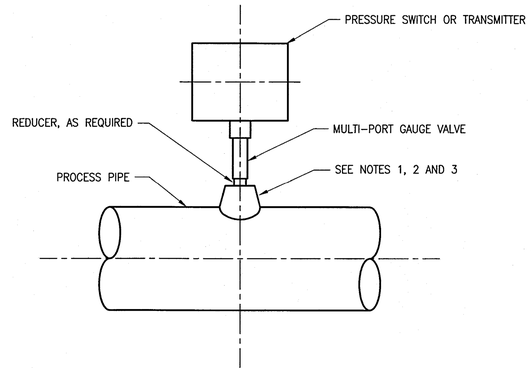

(B) PRESSURE INSTRUMENT – PIPE MOUNT
NTS

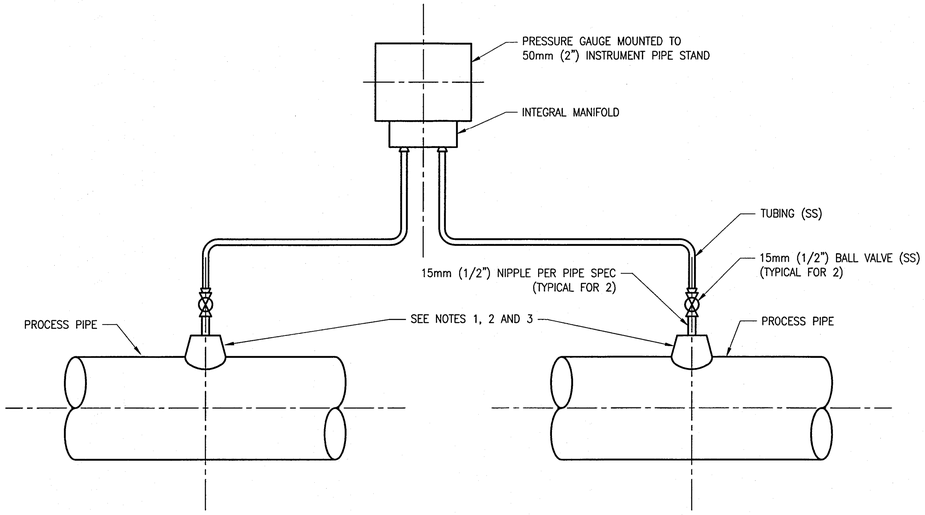

(C) DIFFERENTIAL PRESSURE GAUGE
NTS

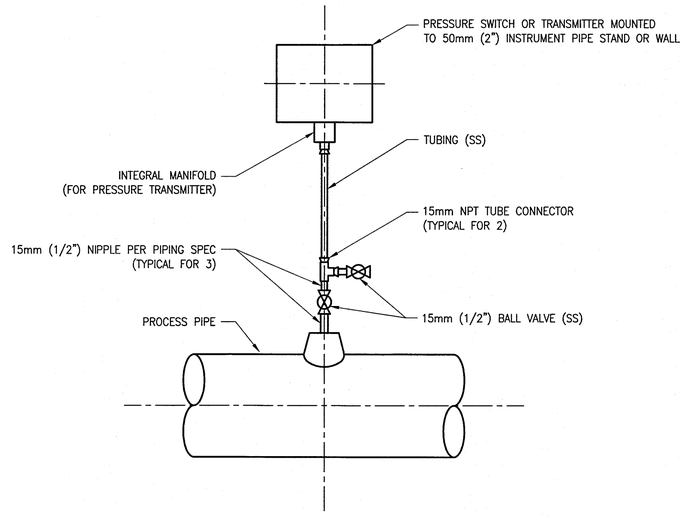

(D) PRESSURE INSTRUMENT – REMOTE MOUNT
NTS

REFERENCE DRAWINGS	DESCRIPTION

NOTES

1. FOR STEEL, GALVANIZED STEEL, AND PVC 65 (2 1/2") AND SMALLER USE A BUSHING IN A TEE.
2. FOR DUCTILE IRON AND FIBER GLASS REINFORCED PLASTIC PIPE, ALL SIZES, USE PIPE SADDLE WITH BUSHING.
3. FOR STEEL AND STAINLESS STEEL PIPES 80 (3") AND LARGER, AND PRESSURE VESSELS, USE THRED-O-LET AS SHOWN.
4. FOR PRESSURE GAUGE DETAILS SEE DRAWING 1-0102-PDTL-A004.

APEGM Certificate of Authorization
SNC-Lavalin Inc.
No. 4489

NO.	REVISIONS	DATE	DESIGN	CHECK
00	ISSUED FOR CONSTRUCTION – 976-2016	2017/04/05	SSB	TMC

CH2MHILL. SNC·LAVALIN KGS GROUP

DESIGNED BY: S. BOGHOSIAN	CHECKED BY: T. CHURCH
DRAWN BY: MJ. PERSSON	APPROVED BY: E. RYCZKOWSKI
SCALE: NTS	ISSUED FOR CONSTRUCTION BY: J. SHUMKA
DATE: 2016/03/04	DATE: 2017/04/05
CONSULTANT NO.: 474248	

ENGINEER'S SEAL
PROVINCE OF MANITOBA
T.M. CHURCH
Member 32682
REGISTERED PROFESSIONAL ENGINEER
Apr. 3, 2017

Winnipeg
THE CITY OF WINNIPEG
WATER AND WASTE DEPARTMENT

SOUTH END WATER POLLUTION CONTROL CENTRE
SEWPCC UPGRADING/EXPANSION PROJECT
AUTOMATION
INSTALLATION DETAILS
PRESSURE INSTRUMENTS

CITY DRAWING NUMBER	SHEET	REV.	SIZE
1-0102-ADTL-A008	001	00	A1

LAST SAVE: 2017/04/01 – 4:01pm
PATH: C:\pw_workdir\ch2mhill_wbg\sh043264\d0356273\1-0102-ADTL-A008.dwg

PLOT DATE: Apr 01, 2017 – 4:02pm
FILE NAME: 1-0102-ADTL-A008.dwg