A1 SIZE – 594mm x 841mm

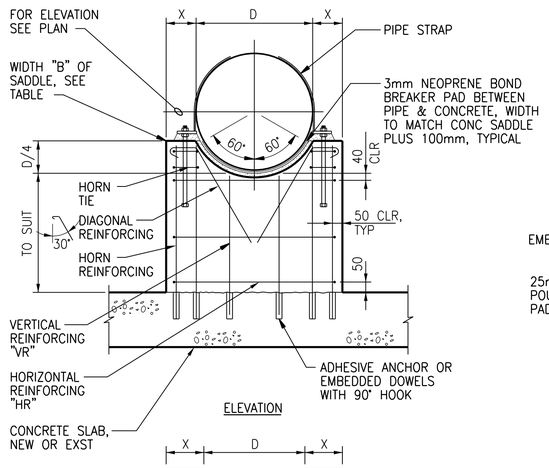

ELEVATION

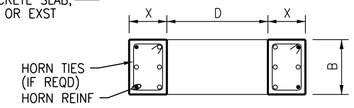

HORN PLAN

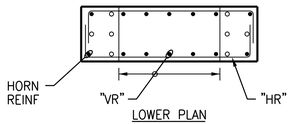

LOWER PLAN

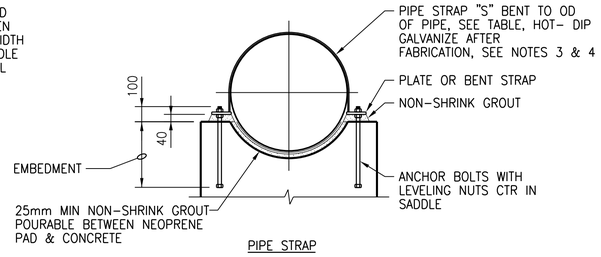

PIPE STRAP

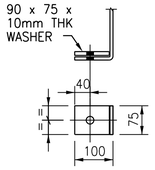

BENT STRAP W/ WASHER

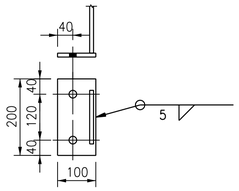

STRAP WELDED TO PLATE

PIPE SADDLE TABLE												
PIPE DIAMETER	SADDLE WIDTH	LAYERS OF REINFORCING	VERTICAL REINFORCING	HORIZONTAL REINFORCING	DIAGONAL REINFORCING	HORN			PIPE STRAP			
						LENGTH	REINFORCING	TIES	STRAP SIZE	PLATE	ANCHOR	
D (mm)	B (mm)		VR	HR	(EACH SIDE)	X (mm)			S (mm)	PL (mm)	BOLT	EMBED (mm)
75 TO 300	200	1 CTRD	15M@300	15M@300	–	150	1–15M EF	–	5 x 75	–	1–16M	400
350 TO 600	250	2 EF	15M@200	15M@200	1–10M	200	1–15M EF	–	6 x 75	–	1–16M	400
650 TO 1200	300	2 EF	20M@200	20M@200	2–15M	300	2–20M EF	3–10M@200	8 x 75	–	1–25M	600
1250 TO 2400	350	2 EF	25M@250	20M@200	2–20M	350	3–25M EF	4–10M@200	10 x 140	PL100x200x20	2–25M	600

NOTES:

1. FORM 20mm BEVEL ON ALL EXPOSED CORNERS OF SUPPORT.
2. PROVIDE PIPE STRAP AT ALL PIPES. UNLESS INDICATED OTHERWISE A STRAP IS NOT REQUIRED.
3. AT SUBMERGED CONDITIONS, STRAP SHALL BE STAINLESS STEEL.
4. PROVIDE 3mm NEOPRENE BOND BREAKER PAD BETWEEN PIPE & METAL STRAP, WIDTH TO MATCH STRAP PLUS 100mm, TYPICAL.
5. ANCHOR BOLTS TYPE A325 GALVANIZED.

PIPE SUPPORT – CONCRETE SADDLE

NTS

0330–823

©CH2M HILL 2017. ALL RIGHTS RESERVED.

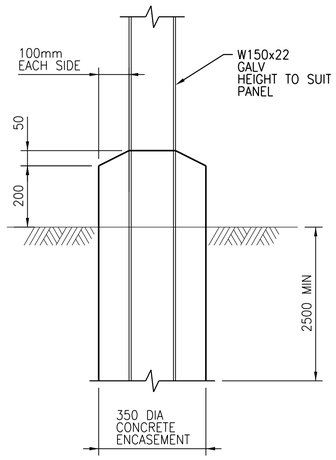

PARKING LOT PANEL SUPPORT FOUNDATION DETAIL

NTS

0559–027

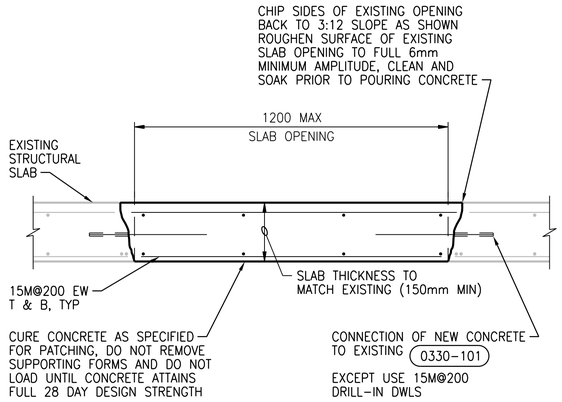

EXISTING SLAB OPENING REPAIR IN LIQUID HOLDING AREAS

NTS

0330–141

02

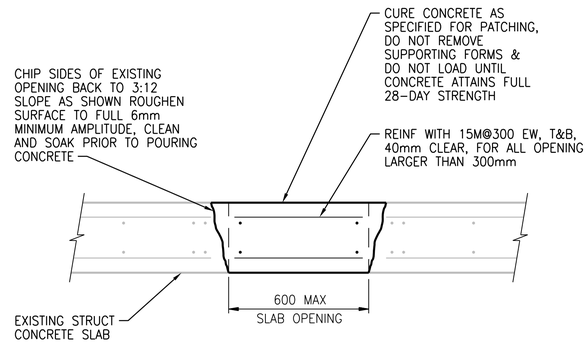

NOTES:

1. FOR REPAIR OF LARGER SLAB OR SLAB IN LIQUID HOLDING AREAS OPENINGS SEE 0330–141
2. FOR REPAIR OF WALL OPENINGS, SEE 0330–145 UNO ON DRAWINGS.

EXISTING SLAB OPENING REPAIR

NTS

0330–142

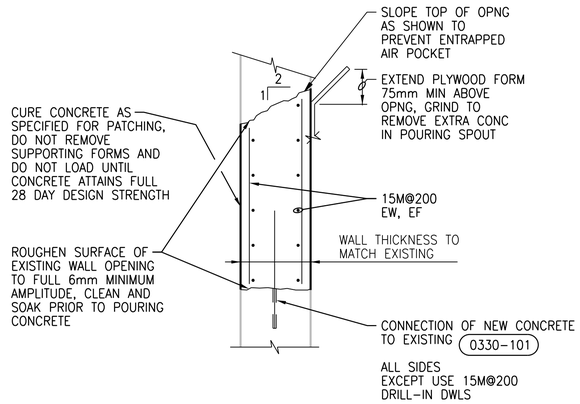

NOTE:

1. CHIP AWAY EXISTING CONCRETE TO CREATE REQUIRED SLOPING WHILE PRESERVING EXISTING WALL REINFORCING.

EXISTING WALL OPENING REPAIR

NTS

0330–145

APEGM
Certificate of Authorization
CH2M HILL Canada Ltd.
No. 1441

NO.	REVISIONS	DATE	DESIGN	CHECK
03	ISSUED FOR CONSTRUCTION – 976–2016	2017/04/05	G.O.	J.C.
02	ISSUED FOR 90% PRELIMINARY REVIEW	09/2016	G.O.	J.C.
01	ISSUED FOR CONSTRUCTION	10/2015	G.O.	J.C.
00	ISSUED FOR TENDER	08/2015	G.O.	J.C.

CH2MHILL. KGS GROUP SNC·LAVALIN

DESIGNED BY: J. THANNICKAL
CHECKED BY: E. LUI
DRAWN BY: G.OMORI
APPROVED BY: H.T. FREIHAMMER
SCALE: NTS
ISSUED FOR CONSTRUCTION BY: J. SHUMKA
DATE: 2017/04/05
DATE: 2017/04/05
CONSULTANT NO.: 474248

ENGINEER'S SEAL
APR 5, 2017
PROVINCE OF MANITOBA
LUI
Member
37003
REGISTERED PROFESSIONAL ENGINEER

Winnipeg
THE CITY OF WINNIPEG
WATER AND WASTE DEPARTMENT

SOUTH END WATER POLLUTION CONTROL CENTRE
SEWPCC UPGRADING/EXPANSION PROJECT
STRUCTURAL
STANDARD DETAILS (8)

CITY DRAWING NUMBER	SHEET	REV.	SIZE
1–0102–SDTL–A009		03	A1

PLOT DATE: 2017\03\29
FILE NAME: 1–0102–SDTL–A009.dgn