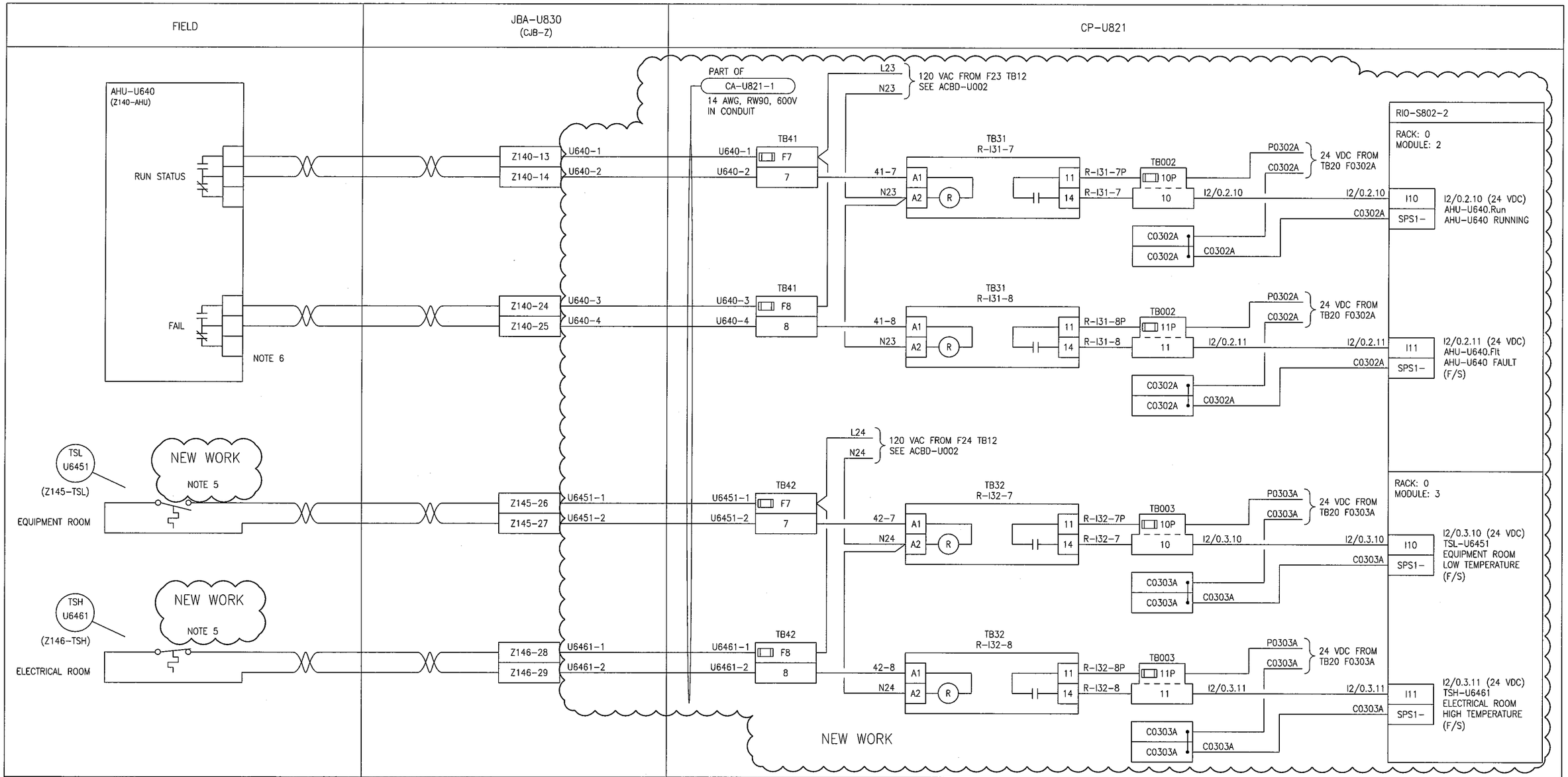

B SIZE - 279mm x 432mm

NOTES

1. THIS DRAWING SUPERSEDES DWG. SEP-2447.
2. THIS DRAWING IS BASED UPON EXISTING DOCUMENTATION AND MAY NOT REPRESENT THE ACTUAL INSTALLATION.
3. PREVIOUS IDENTIFIERS ARE SHOWN IN PARENTHESES.
4. LOOP NUMBERS WERE CHANGED TO COMPLY WITH IDENTIFICATION STANDARD. HOWEVER, EXISTING WIRING AND RELAYS ARE STILL LABELED WITH OLD LOOP NUMBER.
5. CHANGE EXISTING INSTRUMENTS WIRING IF REQUIRED TO CORRESPOND WITH PLC FAILSAFE STATUS.

APEGM Certificate of Authorization
SNC-Lavalin Inc.
No. 4489

NO.	REVISIONS	DATE	DESIGN	CHECK
00	ISSUED FOR CONSTRUCTION - 976-2016	2017/04/05	SSB	TMC

SNC·LAVALIN CH2MHILL KGS GROUP CONSULTING ENGINEERS

DESIGNED BY: S. BOGHOSIAN	CHECKED BY: T. CHURCH
DRAWN BY: S. BOGHOSIAN	APPROVED BY: E. RYCZKOWSKI
SCALE: NTS	DATE: 2016/01/05
ISSUED FOR CONSTRUCTION BY: J. SHUMKA	DATE: 2017/04/05
CONSULTANT NO.: 474248	

ENGINEER'S SEAL
PROVINCE OF MANITOBA
T.M. CHURCH
Member
32682
REGISTERED PROFESSIONAL ENGINEER
Mar. 31, 2017

Winnipeg
THE CITY OF WINNIPEG
WATER AND WASTE DEPARTMENT

SOUTH END WATER POLLUTION CONTROL CENTRE
SEWPCC UPGRADING/EXPANSION PROJECT
AUTOMATION - LOOP DIAGRAM
AHU-U640, TSL-U6451, TSH-U6461
AIR HANDLING UNIT ALARMS AND TEMPERATURE SWITCHES

CITY DRAWING NUMBER	SHEET	REV.	SIZE
1-0102-AILD-U601	001	00	B

LAST SAVE: 2017/03/27 - 4:37pm
PATH: E:\1-0102-AILD-U601.dwg

PLOT DATE: Mar 27, 2017 - 4:37pm
FILE NAME: 1-0102-AILD-U601.dwg