A1 SIZE - 594mm x 841mm

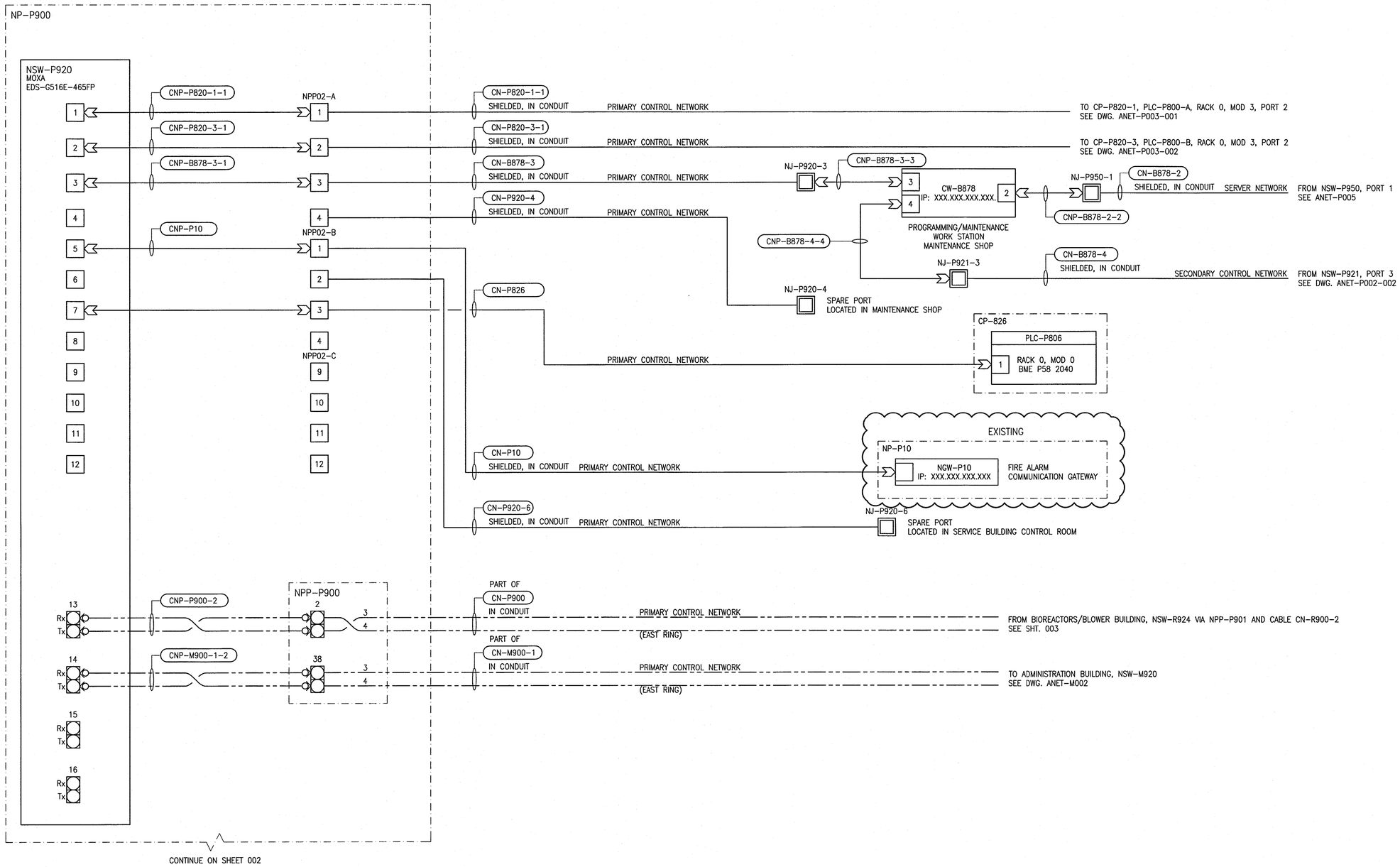

CONTINUE ON SHEET 002

LEGEND:

- RJ45 PORT OR PATCH PANEL
- FIBRE PORT OR PATCH PANEL
- WALL PLATE RJ45 JACK
- CAT6 CABLE
- FIBRE CABLE
- LC FIBRE CONNECTOR
- RJ45 CONNECTOR UNSHIELDED
- RJ45 CONNECTOR SHIELDED

GENERAL NOTES:

1. DEVICE NETWORK RING (OUTGOING AND RETURN) CABLES AND PRIMARY AND SECONDARY CONTROL NETWORK CABLES TO BE RUN WITH A MINIMUM SEPARATION OF 1.22m WHERE CABLES ARE INSTALLED HORIZONTALLY AND 0.3m WHERE THE CABLES ARE INSTALLED VERTICALLY. THE MINIMUM SEPARATION IS NOT REQUIRED WHILE THE CABLES ARE INSIDE CABINETS OR PLINTHS.

REFERENCE DRAWINGS	DESCRIPTION
1-0102-ANET-A005	FACILITY FIBRE ALLOCATION
1-0102-ABDG-P001	CONTROL SYSTEM ARCHITECTURE, PRIMARY CLARIFIERS

APEGM Certificate of Authorization
SNC-Lavalin Inc.
No. 4489

NO.	REVISIONS	DATE	DESIGN	CHECK
00	ISSUED FOR CONSTRUCTION - 976-2016	2017/04/05	PC	TMC

CH2MHILL. SNC·LAVALIN KGS GROUP

DESIGNED BY: P. CHICATUN	CHECKED BY: T. CHURCH
DRAWN BY: MJ. PERSSON	APPROVED BY: E. RYCZKOWSKI
SCALE: NTS	ISSUED FOR CONSTRUCTION BY: J. SHUMKA
DATE: 2014/06/16	DATE: 2017/04/05
CONSULTANT NO.: 474248	

ENGINEER'S SEAL
PROVINCE OF MANITOBA
CHICATUN
Member
30307
REGISTERED PROFESSIONAL ENGINEER
APR. 4/ 2017
REV00

Winnipeg
THE CITY OF WINNIPEG
WATER AND WASTE DEPARTMENT

SOUTH END WATER POLLUTION CONTROL CENTRE
SEWPCC UPGRADING/EXPANSION PROJECT
AUTOMATION - NETWORK DIAGRAM
PRIMARY CLARIFIERS
CONTROL NETWORK

CITY DRAWING NUMBER	SHEET	REV.	SIZE
1-0102-ANET-P002	001	00	A1

LAST SAVE: 2017/04/01 - 10:47am
PATH: C:\pw_workdir\ch2mhill_wbg\sh043264\d0356273\1-0102-ANET-P002-001.dwg

PLOT DATE: Apr 01, 2017 - 10:47am
FILE NAME:1-0102-ANET-P002-001.dwg