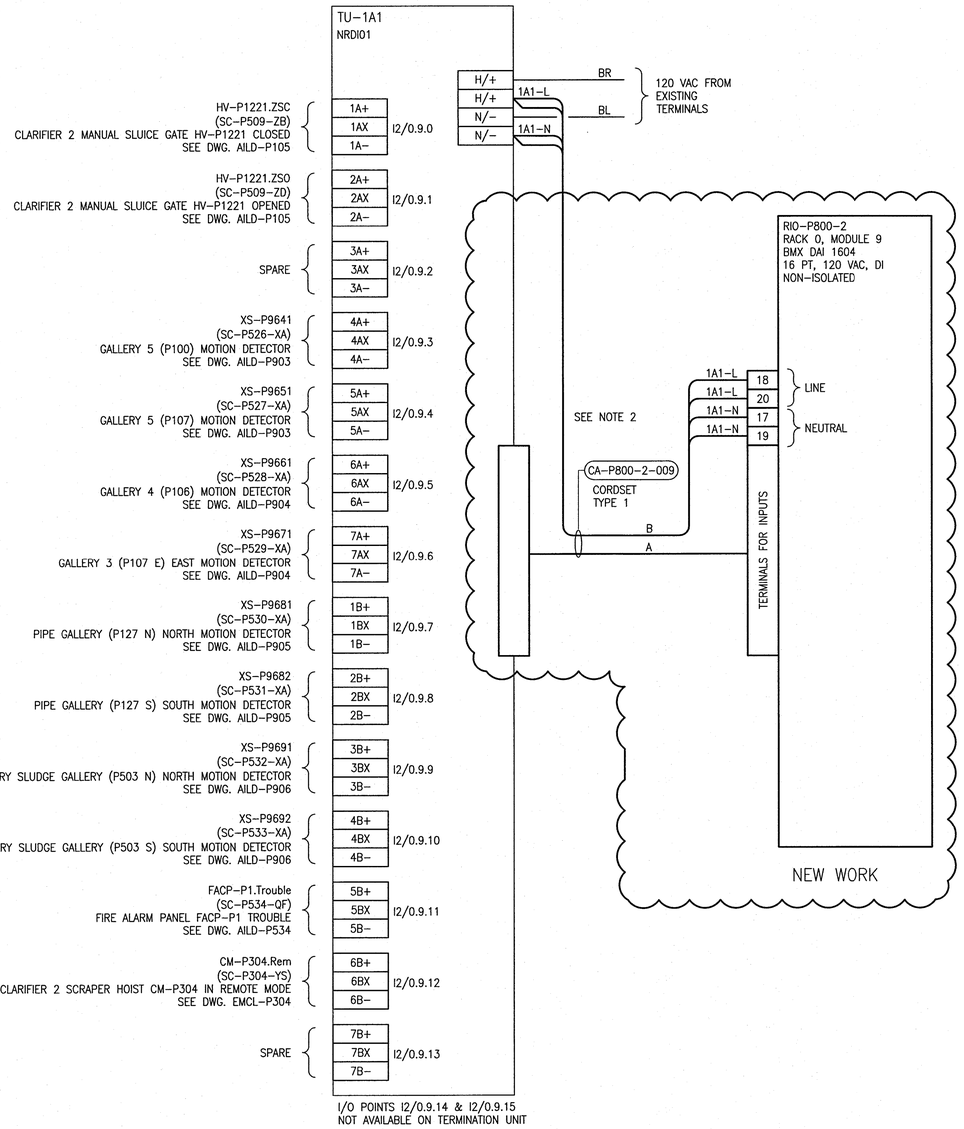

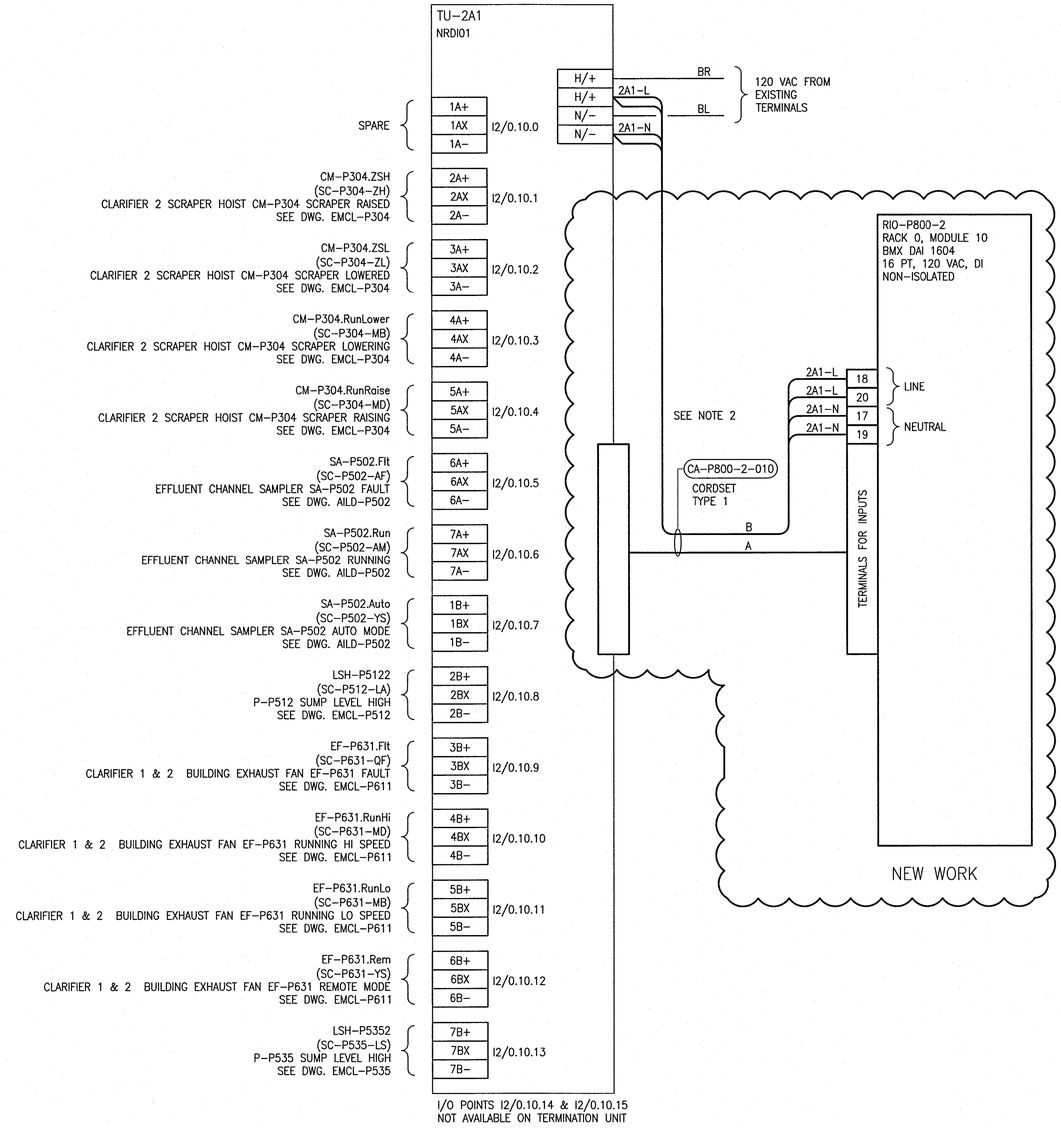

REFERENCE DRAWINGS	DESCRIPTION
1-0102-ADTL-A011	CORDSET ASSEMBLY DETAILS, CORDSET TYPE 1

NOTES

1. PREVIOUS IO POINT IDENTIFIERS ARE SHOWN IN PARENTHESES.
2. REFER TO DRAWING 1-0102-ADTL-A011 FOR TYPE 1 CORDSET ASSEMBLY DETAILS.

APEGM Certificate of Authorization
SNC-Lavalin Inc.
No. 4489

NO.	REVISIONS	DATE	DESIGN	CHECK
00	ISSUED FOR CONSTRUCTION - 976-2016	2017/04/05	MW	TMC

CH2MHILL. SNC·LAVALIN KGS GROUP

DESIGNED BY: M. WANG	CHECKED BY: T. CHURCH
DRAWN BY: M. WANG	APPROVED BY: E. RYCZKOWSKI
SCALE: NTS	ISSUED FOR CONSTRUCTION BY: J. SHUMKA
DATE: 2014/10/23	DATE: 2017/04/05
CONSULTANT NO.: 474248	

ENGINEER'S SEAL
PROVINCE OF MANITOBA
T. M. CHURCH
Member 32682
REGISTERED PROFESSIONAL ENGINEER
Apr. 4, 2017

Winnipeg
THE CITY OF WINNIPEG
WATER AND WASTE DEPARTMENT

SOUTH END WATER POLLUTION CONTROL CENTRE
SEWPCC UPGRADING/EXPANSION PROJECT
AUTOMATION - WIRING DIAGRAM
PRIMARY CLARIFIERS
CP-P820-3 AND CP-P820-4, RIO-P800-2 - DISCRETE INPUTS

CITY DRAWING NUMBER	SHEET	REV.	SIZE
1-0102-ACBD-P010	005	00	A1

A1 SIZE - 594mm x 841mm

LAST SAVE: 2017/04/01 - 10:29am
PATH: C:\pw_workdir\ch2mhill_wbg\sh043264\d356273\1-0102-ACBD-P010-005.dwg

PLOT DATE: Apr 01, 2017 - 10:29am

FILE NAME:1-0102-ACBD-P010-005.dwg