A1 SIZE – 594mm x 841mm

FUSE SCHEDULE

TB	IDENTIFIER	SIZE	RATED CURRENT
TB22	F21	5x20mm	5A TD
	F22	5x20mm	5A TD
	F23	5x20mm	3.15A TD
	F24	5x20mm	5A TD
	F25	5x20mm	1A FA
	F26	5x20mm	1A FA
	F27	5x20mm	1A FA
	F28	5x20mm	1A FA
	F29	5x20mm	1A FA
	F30	5x20mm	1A FA
	F31A	5x20mm	0.5A FA
	F31B	5x20mm	0.5A FA
	F32	5x20mm	0.5A FA
	F33	5x20mm	3A FA
	F34	5x20mm	3A FA

NOTES
FA = FAST ACTING
TD = TIME DELAY

ELECTRONIC CIRCUIT PROTECTION SCHEDULE

TB	IDENTIFIER	SIZE	RATED CURRENT
TB32	CB–1	12.5x80mm	1A CLASS 2
	CB–2	12.5x80mm	1A CLASS 2

NOTES:

RM02 – POWER CONSUMPTION SCHEDULE AT 24 VDC

LOAD	QTY.	CURRENT (mA)	SUBTOTAL (mA)	NOTES
PLC–P800–B	1	1650	1650	2
RIO–P800–2.R0	1	1650	1650	1
RIO–P800–2.R1	1	1000	1000	1
RIO–P800–3.R0	1	1650	1650	1
DISCRETE INPUTS	32	2.5	80	
DISCRETE OUTPUTS	96	24	2304	3
NSW–P930	1	417	417	
NSW–P931	1	417	417	
TOTAL			9168	

NOTES
1. BASED ON POWER SUPPLY DATA SHEET.
2. BASED ON 55W OF POWER CONSUMPTION.
3. BASED ON INFI90 TERMINATION UNIT DATA SHEET.

LEGEND:

ISOLATED GROUND

EQUIPMENT GROUND

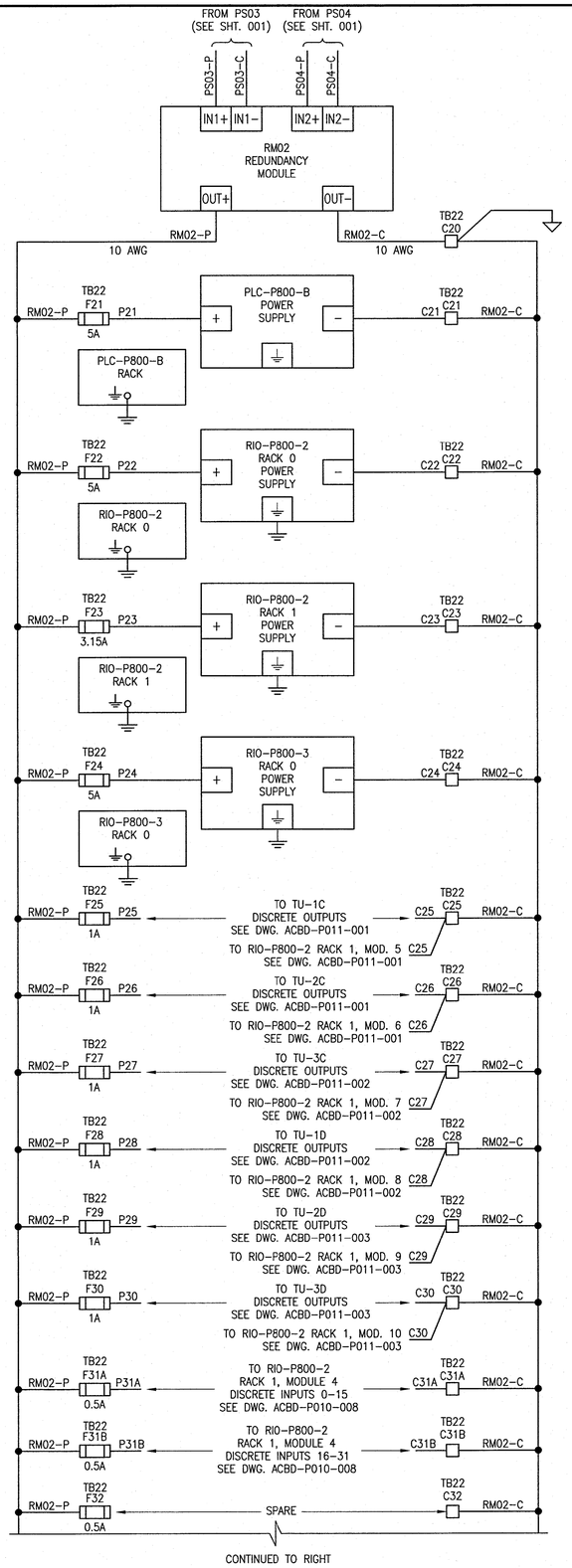

TERMINAL LAYOUT TB32

CB–1
CB–2
C33A
C12B

TERMINAL LAYOUT TB22

F21
F22
F23
F24
F25
F26
F27
F28
F29
F30
F31A
F31B
F32
F33
F34
C20
C21
C22
C23
C24
C25
C26
C27
C28
C29
C30
C31A
C31B
C32
C33
C34

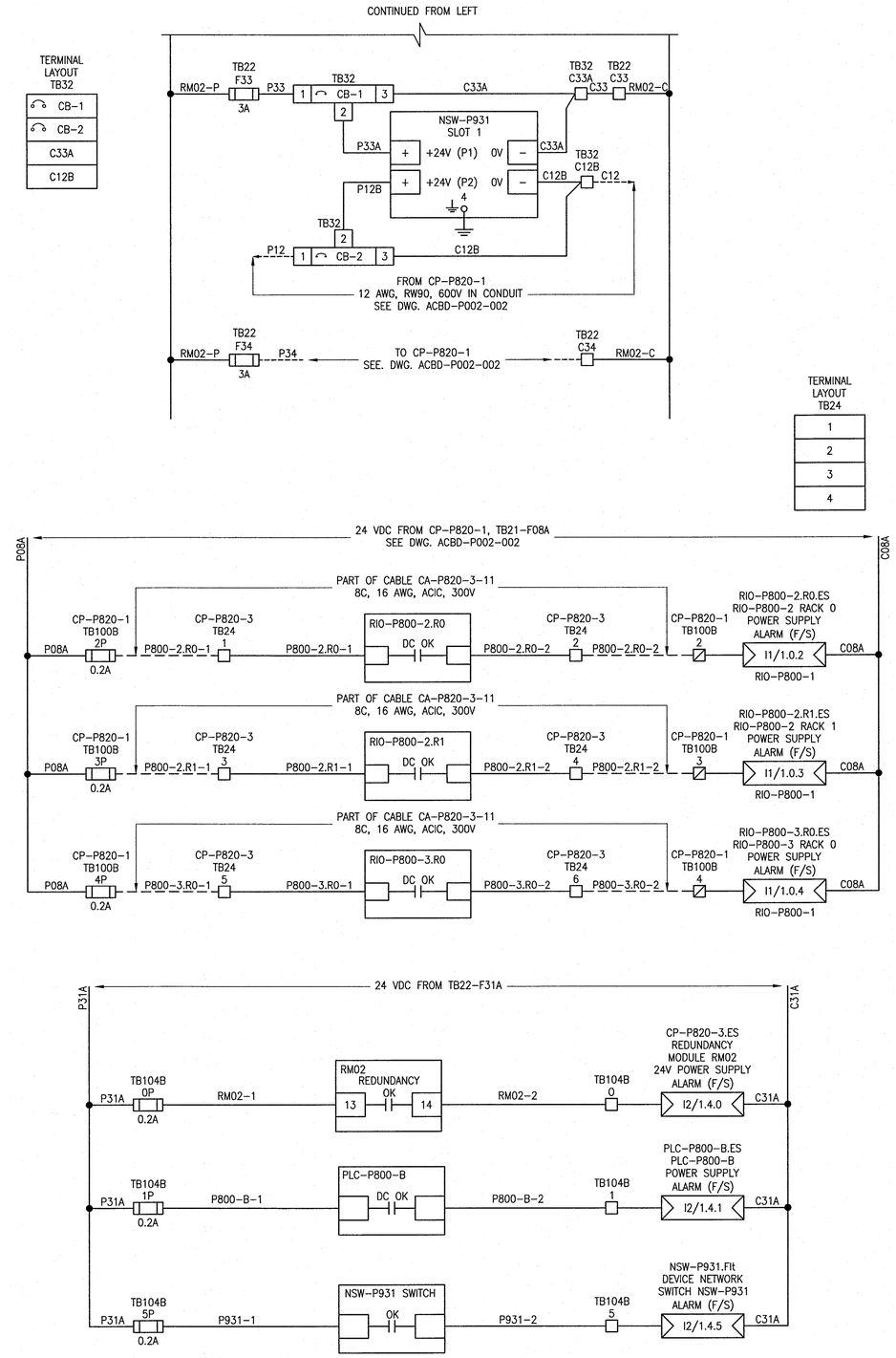

REFERENCE DRAWINGS	DESCRIPTION
1–0102–ACBD–P002	POWER DISTRIBUTION SCHEMATIC, CP–P820–1 & CP–P820–2

APEGM Certificate of Authorization
SNC-Lavalin Inc.
No. 4489

NO.	REVISIONS	DATE	DESIGN	CHECK
00	ISSUED FOR CONSTRUCTION – 976–2016	2017/04/05	MW	TMC

CH2MHILL. SNC·LAVALIN KGS GROUP

DESIGNED BY: M. WANG
CHECKED BY: T. CHURCH
DRAWN BY: M. WANG
APPROVED BY: E. RYCZKOWSKI
SCALE: NTS
ISSUED FOR CONSTRUCTION BY: J. SHUMKA
DATE: 2015/12/07
DATE: 2017/04/05
CONSULTANT NO.: 474248

ENGINEER'S SEAL
PROVINCE OF MANITOBA T.M. CHURCH Member 32682 REGISTERED PROFESSIONAL ENGINEER Apr. 4/2017

Winnipeg
THE CITY OF WINNIPEG
WATER AND WASTE DEPARTMENT

SOUTH END WATER POLLUTION CONTROL CENTRE
SEWPCC UPGRADING/EXPANSION PROJECT
AUTOMATION – POWER DISTRIBUTION SCHEMATIC
PRIMARY CLARIFIERS
CP–P820–3 AND CP–P820–4

CITY DRAWING NUMBER	SHEET	REV.	SIZE
1–0102–ACBD–P009	002	00	A1

LAST SAVE: 2017/04/01 – 10:28am
PATH: C:\pw_workdir\ch2mhill_wbg\sln043264\a0356273\1–0102–ACBD–P009–002.dwg

PLOT DATE: Apr 01, 2017 – 10:28am
FILE NAME: 1–0102–ACBD–P009–002.dwg