A1 SIZE – 594mm x 841mm

ELEMENTARY DIAGRAM:

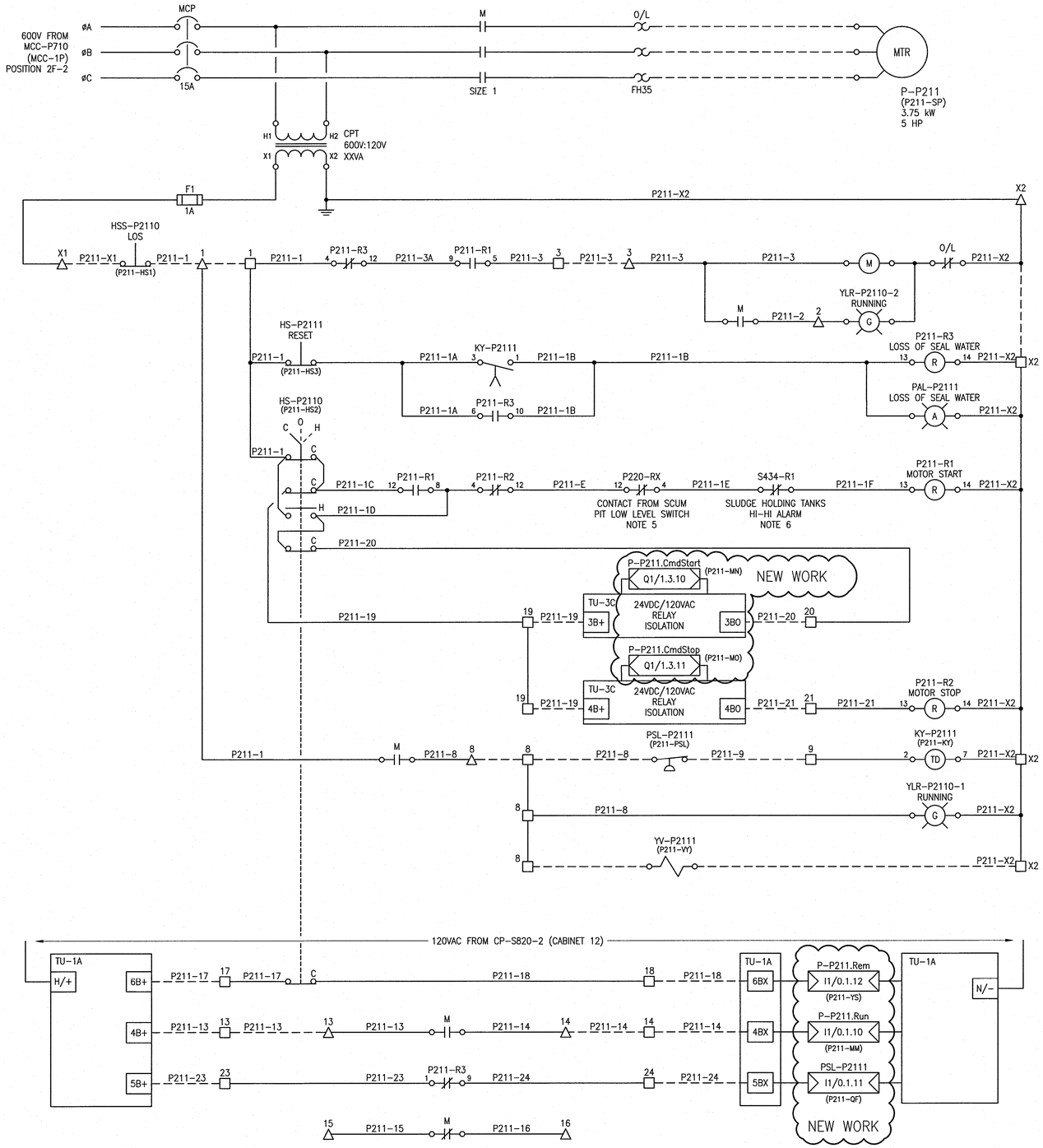

FIELD CONNECTION DIAGRAM:

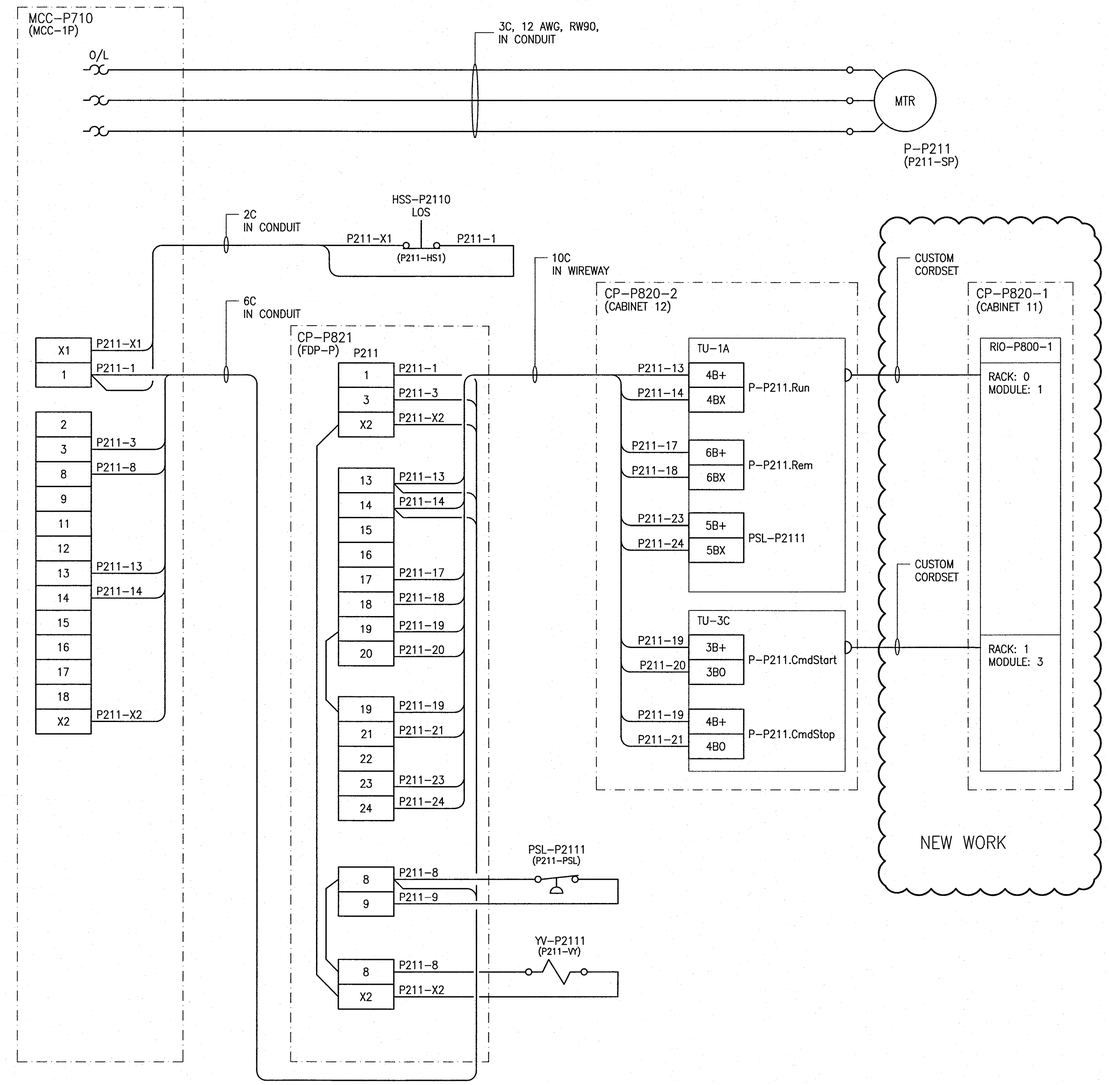

NEW WORK
– REPLACE PILOT LIGHTS AS REQUIRED WITH COLORS AS SHOWN

LEGEND:
- △ MCC TERMINAL
- □ CP-P821 CABINET TERMINAL
- RIO-P800-1 OUTPUT
- RIO-P800-1 INPUT

REFERENCE DRAWINGS	DESCRIPTION

NOTES

1. THIS DRAWING SUPERCEDES SEP-1120.
2. THIS DRAWING WAS BASED UPON EXISTING DOCUMENTATION AND MAY NOT REPRESENT THE ACTUAL INSTALLATION.
3. PREVIOUS IDENTIFIERS ARE SHOWN IN PARENTHESES.
4. THE ENGINEER'S DESIGN RESPONSIBILITY IS LIMITED TO THE REPLACEMENT OF THE DCS WITH PLC-BASED CONTROL.
5. SEE AILD-P202 FOR P220-RX COIL.
6. SEE AILD-S414 FOR S434-R1 COIL.

APEGM Certificate of Authorization
SNC-Lavalin Inc.
No. 4489

NO.	REVISIONS	DATE	DESIGN	CHECK
00	ISSUED FOR CONSTRUCTION – 976-2016	2017/04/05	SSB	TMC

CH2MHILL. KGS GROUP SNC·LAVALIN

DESIGNED BY: S. BOGHOSIAN	CHECKED BY: T. CHURCH
DRAWN BY: S. BOGHOSIAN	APPROVED BY: E. RYCZKOWSKI
SCALE: NTS	ISSUED FOR CONSTRUCTION BY: J. SHUMKA
DATE: 2014/08/01	DATE: 2017/04/05
CONSULTANT NO.: 474248	

ENGINEER'S SEAL: PROVINCE OF MANITOBA, T.M. CHURCH Member 32682, REGISTERED PROFESSIONAL ENGINEER, Apr. 4, 2017

Winnipeg — THE CITY OF WINNIPEG, WATER AND WASTE DEPARTMENT

SOUTH END WATER POLLUTION CONTROL CENTRE
SEWPCC UPGRADING/EXPANSION PROJECT
ELECTRICAL – MOTOR STARTER SCHEMATIC
P-P211
PRIMARY CLARIFIER 3 SCUM PUMP

CITY DRAWING NUMBER	SHEET	REV.	SIZE
1-0102-EMCL-P211	001	00	A1

PLOT DATE: Mar 24, 2017 – 1:17pm
FILE NAME:1-0102-EMCL-P211.dwg

LAST SAVE: 2017/03/24 – 1:17pm
PATH: C:\Users\degub\Desktop\EMCL\1-0102-EMCL-P211.dwg