A1 SIZE – 594mm x 841mm

ELEMENTARY DIAGRAM:

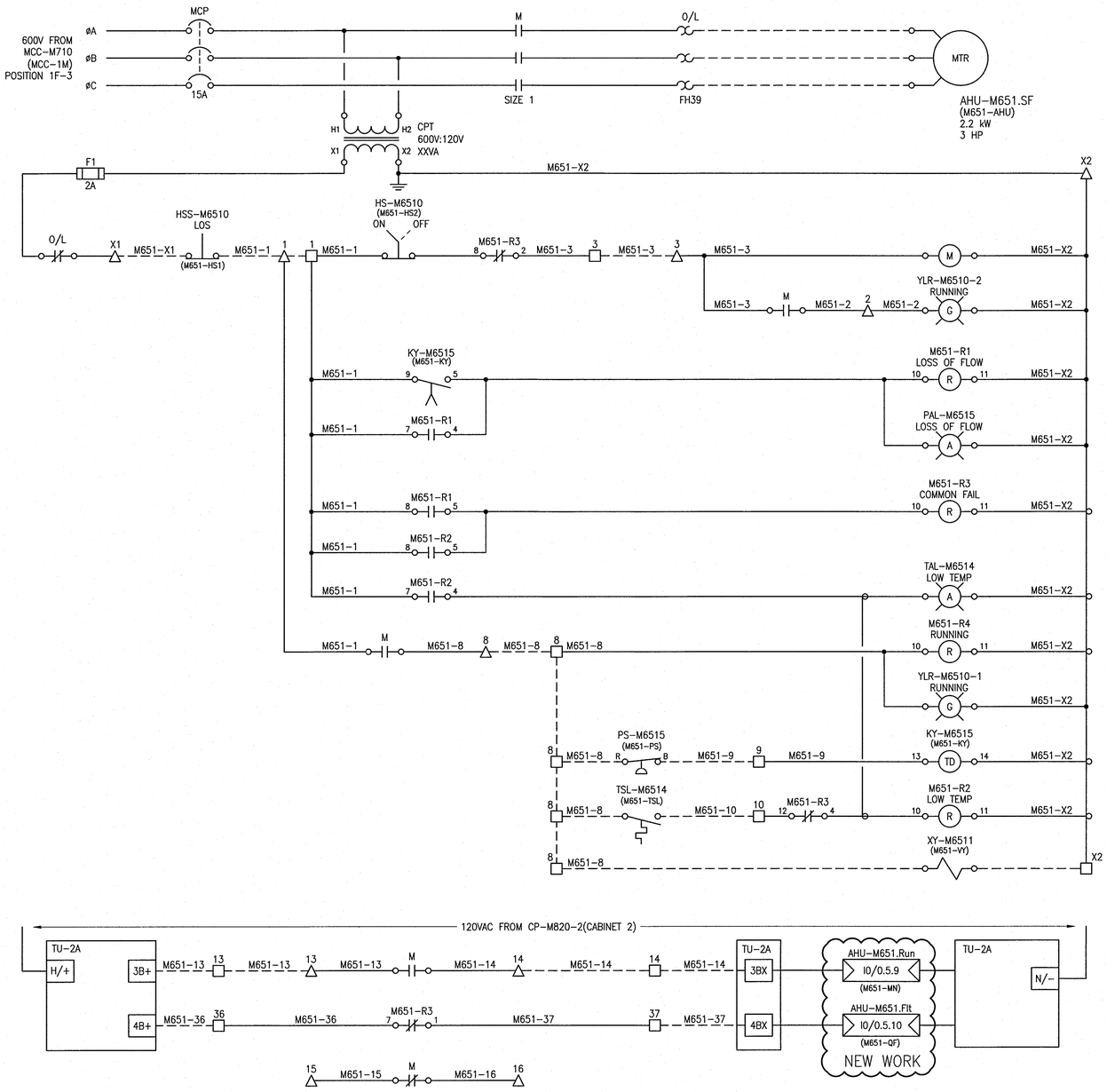

FIELD CONNECTION DIAGRAM:

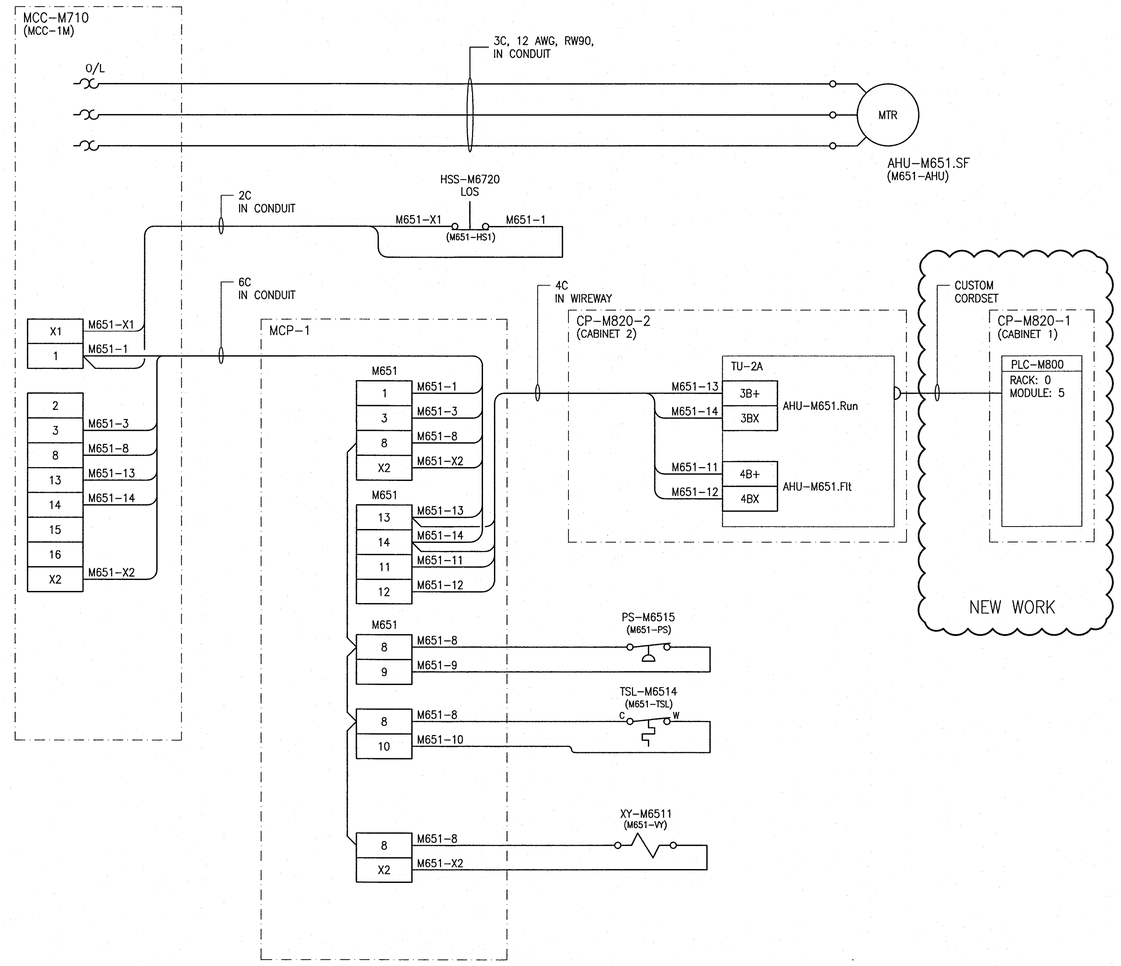

NEW WORK
REPLACE PILOT LIGHTS AS REQUIRED, WITH COLOURS AS SHOWN

LEGEND:

- △ MCC TERMINAL
- □ MCP–1 CABINET TERMINAL
- PLC–M800 OUTPUT
- PLC–M800 INPUT

NOTES

1. THIS DRAWING SUPERCEDES SEP–790 AND SEP–792.
2. THIS DRAWING WAS BASED UPON EXISTING DOCUMENTATION AND MAY NOT REPRESENT THE ACTUAL INSTALLATION.
3. PREVIOUS IDENTIFIERS ARE SHOWN IN PARENTHESES.
4. THE ENGINEER'S DESIGN RESPONSIBILITY IS LIMITED TO THE REPLACEMENT OF THE DCS WITH PLC–BASED CONTROL.
5. ANALOG OUTPUT TEMPERATURE CONTROL SET POINT HAS BEEN DISCONNECTED.

REFERENCE DRAWINGS	DESCRIPTION
--	--

APEGM Certificate of Authorization
SNC-Lavalin Inc.
No. 4489

NO.	REVISIONS	DATE	DESIGN	CHECK
00	ISSUED FOR CONSTRUCTION – 976–2016	2017/04/05	SSB	TMC

CH2MHILL. SNC·LAVALIN KGS GROUP

DESIGNED BY: S. BOGHOSIAN	CHECKED BY: T. CHURCH
DRAWN BY: S. BOGHOSIAN	APPROVED BY: E. RYCZKOWSKI
SCALE: NTS	ISSUED FOR CONSTRUCTION BY: J. SHUMKA
DATE: 2016/08/09	DATE: 2017/04/05
CONSULTANT NO.: 474248	

ENGINEER'S SEAL
PROVINCE OF MANITOBA
T. M. CHURCH
Member 32682
REGISTERED PROFESSIONAL ENGINEER
Apr. 5/2017

Winnipeg
THE CITY OF WINNIPEG
WATER AND WASTE DEPARTMENT

SOUTH END WATER POLLUTION CONTROL CENTRE
SEWPCC UPGRADING/EXPANSION PROJECT
ELECTRICAL – MOTOR STARTER SCHEMATIC
ADMINISTRATION BUILDING
AHU–M651 CONTROL ROOM AND COMPUTER ROOM AIR HANDLING UNIT

CITY DRAWING NUMBER	SHEET	REV.	SIZE
1–0102–EMCL–M605	001	00	A1

LAST SAVE: 2017/03/28 – 4:12pm
PATH: M:\614099\4ENG\47ELE\DD – General DWG\REV\2017–04–05 Issued for Construction – 976–2016\M Administration Building, Septage Facility\1–0102–EMCL–M605.dwg

PLOT DATE: Mar 28, 2017 – 4:12pm
FILE NAME:1–0102–EMCL–M605.dwg