A1 SIZE – 594mm x 841mm

FUSE SCHEDULE

TB	IDENTIFIER	SIZE	RATED CURRENT
TB21	F01	5x20mm	5A TD
	F02	5x20mm	3.15A TD
	F03	5x20mm	1A FA
	F04A	5x20mm	0.5A FA
	F04B	5x20mm	0.5A FA
	F05	5x20mm	0.5A FA
	F06	5x20mm	0.5A FA

NOTES
FA = FAST ACTING
TD = TIME DELAY

TERMINAL LAYOUT TB21

F01
F02
F03
F04A
F04B
F05
F06
C0
C01
C02
C03
C04A
C04B
C05
C06

POWER CONSUMPTION SCHEDULE AT 24 VDC

LOAD	QTY.	CURRENT (mA)	SUBTOTAL (mA)	NOTES
PLC–M800.R0	1	1650	1650	1
PLC–M800.R1	1	1000	1000	1
DISCRETE OUTPUTS	16	24	384	3
DISCRETE INPUTS	32	2.5	80	2
TOTAL			3114	

NOTES
1. BASED ON POWER SUPPLY DATA SHEET.
2. BASED ON DATA SHEET.
3. BASED ON INFI90 TERMINATION UNIT DATA SHEET.

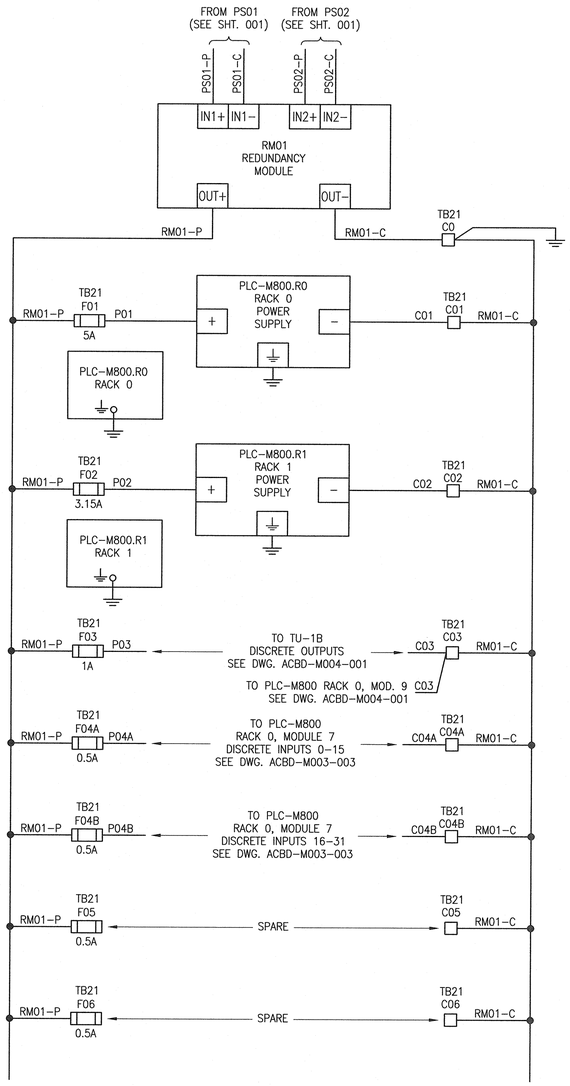

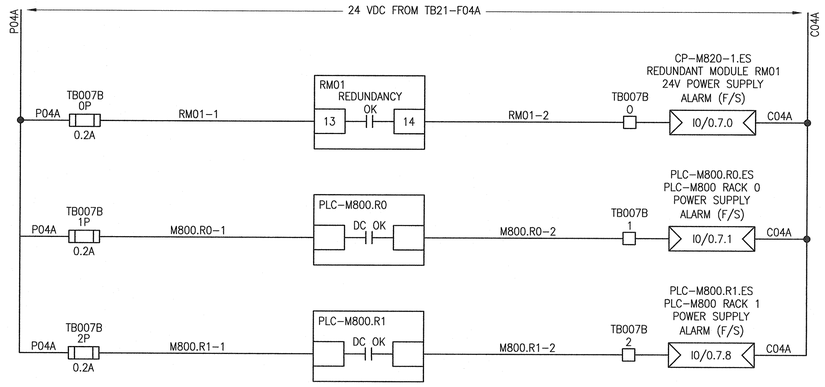

LEGEND:

⏚ EQUIPMENT GROUND

REFERENCE DRAWINGS	DESCRIPTION
1–0102–ACBD–M001	CABINET LAYOUT, CP–M820–1 AND CP–M820–2

APEGM Certificate of Authorization
SNC-Lavalin Inc.
No. 4489

NO.	REVISIONS	DATE	DESIGN	CHECK
00	ISSUED FOR CONSTRUCTION – 976–2016	2017/04/05	MW	TMC

CH2MHILL. KGS GROUP SNC·LAVALIN

DESIGNED BY: M. WANG	CHECKED BY: T. CHURCH
DRAWN BY: S. BOGHOSIAN	APPROVED BY: E. RYCZKOWSKI
SCALE: NTS	ISSUED FOR CONSTRUCTION BY: J. SHUMKA
DATE: 2014/09/11	DATE: 2017/04/05
CONSULTANT NO.: 474248	

ENGINEER'S SEAL
PROVINCE OF MANITOBA
T.M. CHURCH Member 32682
REGISTERED PROFESSIONAL ENGINEER
Apr. 9, 2017

Winnipeg
THE CITY OF WINNIPEG
WATER AND WASTE DEPARTMENT

SOUTH END WATER POLLUTION CONTROL CENTRE
SEWPCC UPGRADING/EXPANSION PROJECT
AUTOMATION – POWER DISTRIBUTION SCHEMATIC
ADMINISTRATION BUILDING
CONTROL CABINET CP–M820–1 AND CP–M820–2

CITY DRAWING NUMBER	SHEET	REV.	SIZE
1–0102–ACBD–M002	002	00	A1

LAST SAVE: 2017/04/04 – 3:18pm
PATH: C:\pw_workdir\ch2mhill_wbg\sh043264\d0356338\1–0102–ACBD–M002–002.dwg

PLOT DATE: Apr 04, 2017 – 3:18pm
FILE NAME: 1–0102–ACBD–M002–002.dwg