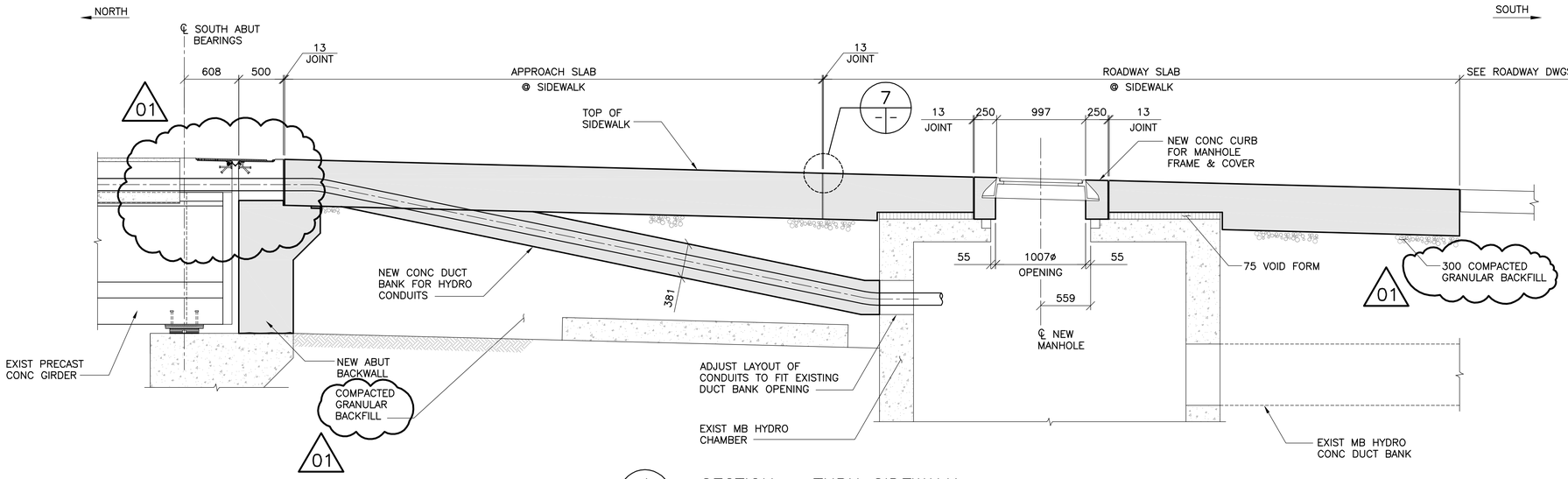

1 / 38 40 SECTION – THRU SIDEWALK
1 : 30

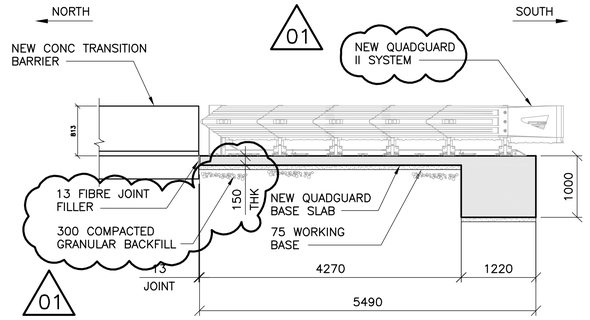

5 / 38 40 SECTION
1 : 50

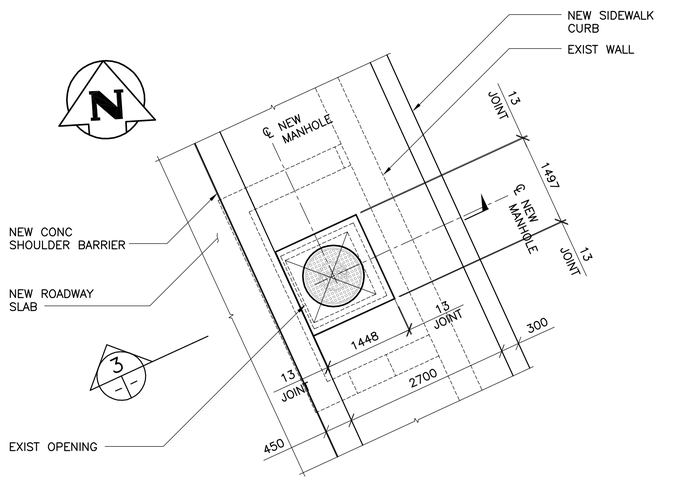

2 / 38 40 PARTIAL PLAN – AT HYDRO MANHOLE
1 : 50

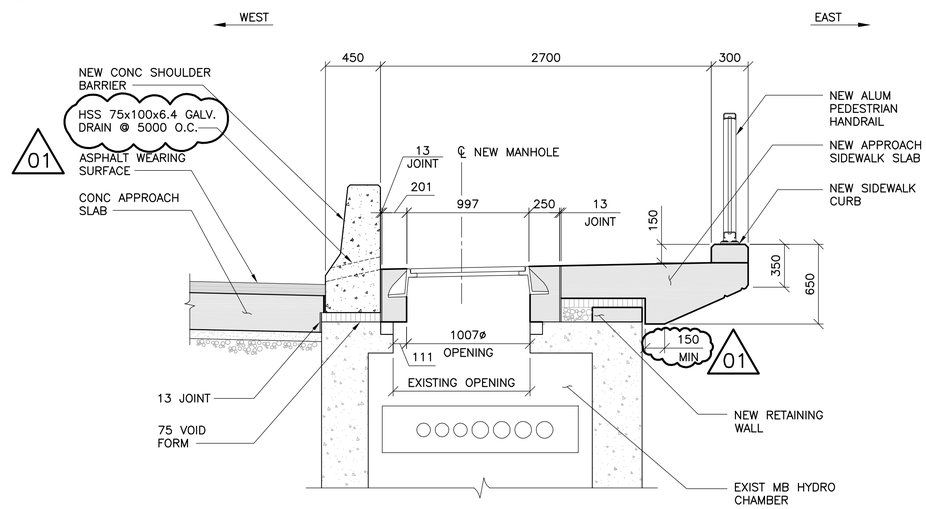

3 / – – SECTION – AT HYDRO MANHOLE
1 : 25

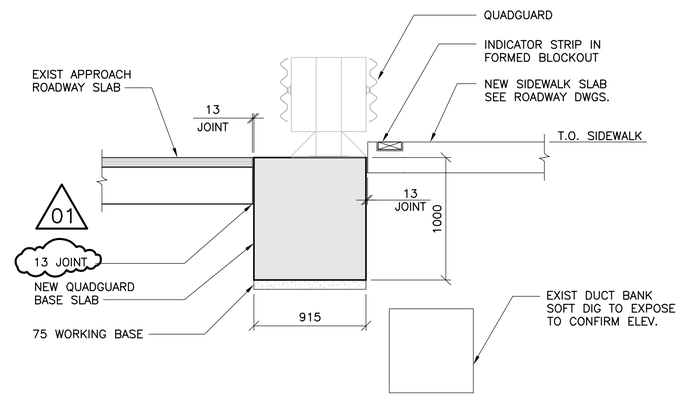

6 / 38 40 SOUTH EAST ELEVATION
1 : 25

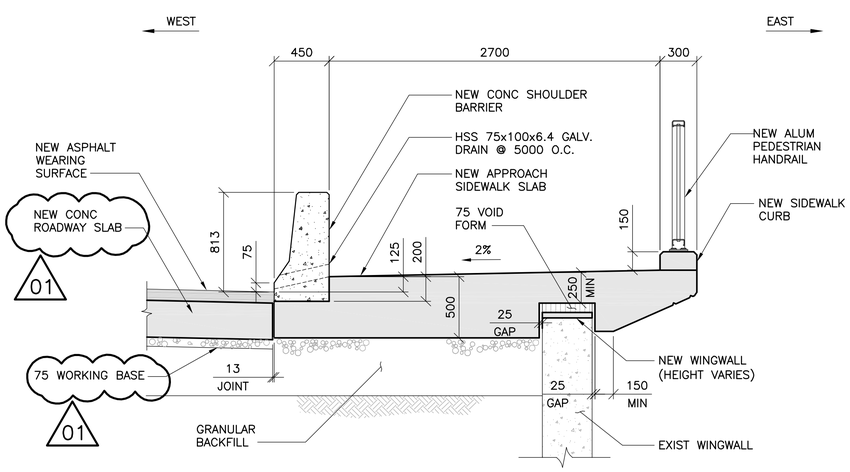

4 / 38 40 SECTION
1 : 25

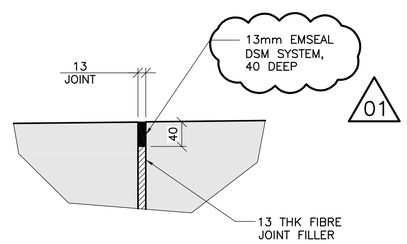

7 / – – TYPICAL JOINT DETAIL
1 : 5

APEGM
Certificate of Authorization
Wardrop Engineering Inc.
No. 195 Date: April 30, 2011

NO.	REVISIONS	DATE	BY
01	ISSUED FOR ADDENDUM 1	11.03.07	RHW
00	ISSUED FOR TENDER	11.02.18	RHW

B.M. ELEV. F.B.

WARDROP
A TETRA TECH COMPANY

DESIGNED BY	S.Y.	CHECKED BY	R.H.W.
DRAWN BY	B.M.	APPROVED BY	R.H.W.
HOR. SCALE: / VERTICAL:	AS NOTED	RELEASED FOR CONSTRUCTION	DATE
		ORIGINAL SIGNED	11.02.16
DATE	10.10.20	MATT CHISLETT, P.ENG BRIDGE PROJECTS ENGINEER	

PROVINCE OF MANITOBA
ORIGINAL SIGNED 11.02.16
W.R. HALDANE-WILSONE
REGISTERED PROFESSIONAL ENGINEER

CONSULTANT DRAWING NO.
0900070502-DWG-S0040

Winnipeg
THE CITY OF WINNIPEG
PUBLIC WORKS DEPARTMENT
ENGINEERING DIVISION

OSBORNE STREET BRIDGE
REHABILITATION & RELATED WORKS

CITY DRAWING NUMBER
B109-11-045

SHEET 40 OF 131

SOUTH ABUTMENT AND APPROACH SLAB
PHASE 1 CONSTRUCTION

40