D SIZE 22" x 34" (559mm x 864mm)

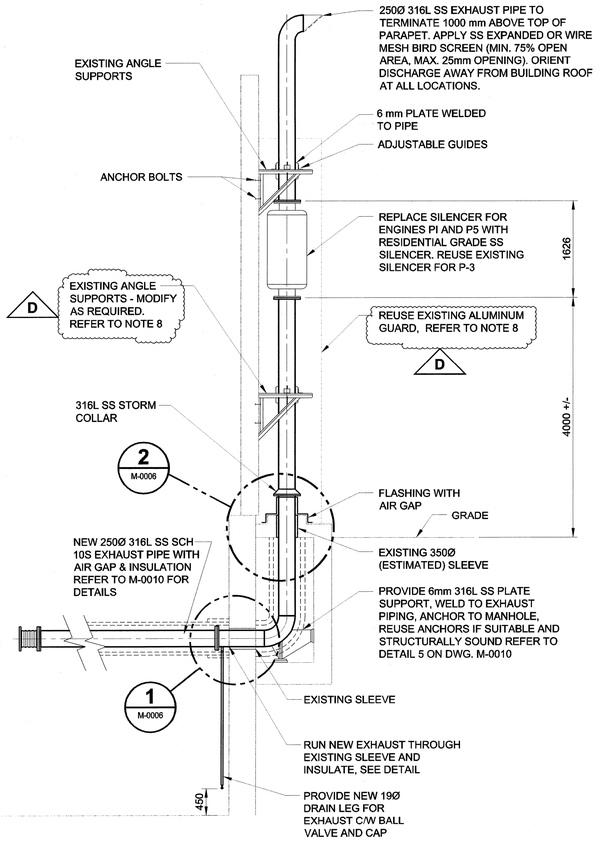

SECTION A M-0005

0 500 1000 1500 mm SCALE 1:50

TYPICAL FOR ENGINES P1, P3, & P5

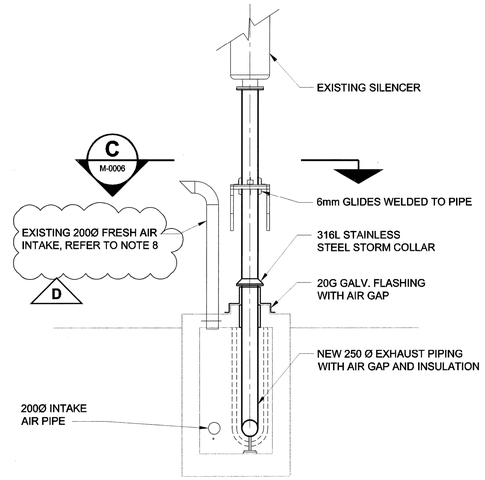

SECTION B M-0005

0 500 1000 1500 mm SCALE 1:50

TYPICAL FOR ENGINES P1, P3 & P5

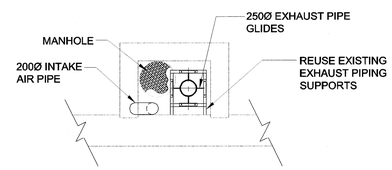

SECTION C M-0006

0 500 1000 1500 mm SCALE 1:50

TYPICAL FOR ENGINES P1, P3 & P5

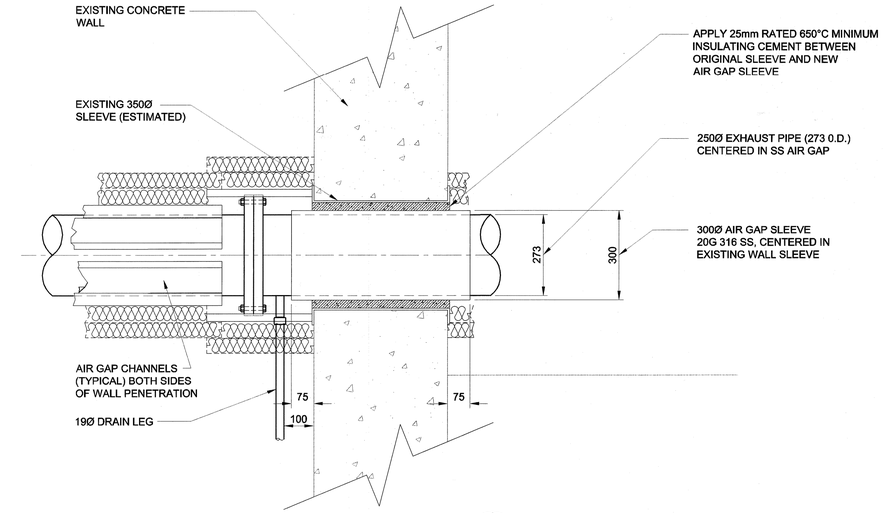

WALL PENETRATION 1 M-0006

0 100 200 300 mm SCALE 1:10

TYPICAL ALL LOCATIONS

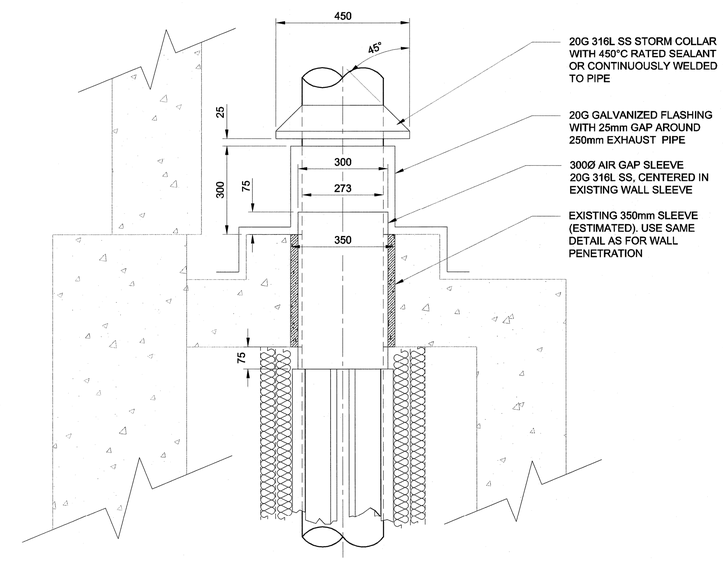

CURB PENETRATION 2 M-0006

0 100 200 300 mm SCALE 1:10

TYPICAL ALL LOCATIONS

NOTES:

1. EXHAUST PIPE EXPANSION JOISTS TO PROVIDE A MINIMUM OF 37mm (1.5") AXIAL AND 12mm (0.5") LATERAL DEFLECTION UNLESS OTHERWISE NOTED.
2. FLANGED EXPANSION JOISTS SHALL BE USED.
3. EXHAUST PIPE SUPPORTS TO BE ROLLER TYPE EXCEPT WHERE SHOWN AS FIXED.
4. FIXED SUPPORTS SHALL PREVENT MOTION OF PIPE AT THAT LOCATION. DETAILS ON 1-0630A-D-M0011
5. STAINLESS STEEL WELDING SHALL BE ACCORDING TO ANSI/AWS D10.4-86(52000). SUBMIT PROPOSED FILLER MATERIAL AND PROCEDURE PRIOR TO WELDING.
6. ALL AIR INTAKE PIPING SUPPORTS TO BE ROLLER TYPE,
7. FINAL LOCATION OF EXHAUST AND COMBUSTION AIR PIPING TO BE ADJUSTED TO SUIT ENGINE SELECTION.
8. BLAST ALL STEEL SURFACES TO COATING MANUFACTURER'S RECOMMENDATIONS. VERIFY AND REPAIR ALL WELDS AND CONNECTIONS. APPLY NEW WALL ANCHORS. COAT ALL STEEL SURFACES WITH MIN. 405°C RATED COATING SYSTEM (INORGANIC ZINC PRIMER WITH SILOXANE TYPE TOPCOAT, ALUMINUM COLOUR)

D

ALS	RJP	CC	RJP
DRN	CHK	DES	ENG	IDR
UMA	AECOM REVIEW		

B.M.
ELEV.
FIELD BOOK #:

POSTED TO LBIS

NO.	REVISIONS	DATE	BY
D	ISSUED FOR ADDENDUM	07/08/16	ALS
C	ISSUED FOR BID	07/06/15	RJP
B	ISSUED FOR 99% REVIEW	07/05/04	RJP
A	ISSUED FOR 75% REVIEW	07/03/15	RJP

UMA | AECOM

© 2006 UMA ENGINEERING LTD. ALL RIGHTS RESERVED.

DESIGNED BY CAC	CHECKED BY -----
DRAWN BY RJP	APPROVED BY –
HOR. SCALE AS NOTED / VERTICAL AS NOTED	RELEASED FOR CONSTRUCTION
DATE 07/03/09	DATE

FILENAME: D265-199-00_01-M-0006_RX.dwg

ENGINEER'S SEAL

PROVINCE OF MANITOBA
Aug 22-07
C. A. D. COURCHAINE
REGISTERED PROFESSIONAL ENGINEER

Winnipeg
THE CITY OF WINNIPEG
WATER AND WASTE DEPARTMENT

McPHILLIPS PUMPING STATION
Contract No.
Natural Gas Engine Drives Replacement
Mechanical - P1, P3, & P5
ENGINE EXHAUST DETAILS

CITY DRAWING NUMBER	SHEET	REV.	SIZE
1-0640A-D-M0006	001	D	D

PLOT: 07/08/21 4:26:06 PM
UMA FILE NAME: D265-199-00_01-M-0006_RX.dwg Saved By: astone